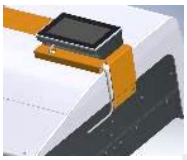

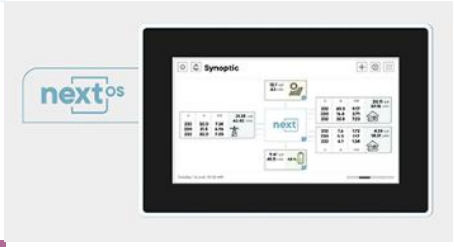

Detailed Tech Manual

Smart hybrid inverter charger with advanced interface

nx3 16000-48 st

nx3 16000-48 st rack

nx3 16000-48 st AU *for Australian model*

with:

-s (solar)

-t (transfer)

Options:

-i (interface)

Accessories:

Remote control and communication…….. ***nx-interface***

Battery temperature sensor…..... ***nx tempSensor (included with nx3 device)***

Cables for communication…….. ***nx-ethernetCab-1m (ethernet, cat5, 26AWG)***

Communication to Vario solar chargers…….. ***xcom-485i-nx***

Powermeter for house introduction measurement … ***energy metering 3-PH***

Contents

1 INTRODUCTION 4
2 GENERAL INFORMATION 5
2.1 Important safety instructions 5
2.2 Quality and warranty 6
2.2.1 Exclusion of warranty 6
2.2.2 Exclusion of liability 6
2.3 Conventions 7
2.3.1 Glossary 7
2.3.2 Symbols and conventions 7
2.4 About this user manual 8
3 ESSENTIALS TO KNOW ABOUT A NEXT3 SYSTEM 9
3.1 Understand the General Energy Strategy 10
3.2 Standard use cases 13
4 HANDLING AND MOUNTING 15
4.1 Handling and moving 15
4.2 Storage 15
4.3 Dimensions 15
4.3.1 Dimensions of wall mounted next3 15
4.3.2 Dimensions of the 19'' rack next3 16
4.3.3 Dimensions of the nx-interface 17
4.4 Unpacking and mounting 18
4.4.1 Mounting place: environmental factors 18
4.4.2 Unpacking and mounting process of the wall mounted next3 20
4.4.3 Unpacking and mounting process of the rack next3 25
5 WIRING 28
5.1 General overview 28
5.1.1 System block diagram 28
5.1.2 General recommendations 30
5.1.3 Connections overview 31
5.1.4 Tightening torques 34
5.1.5 Max permissible cable cross-sections summary 34
5.2 Connecting the battery 35
5.2.1 Dimensioning the battery 36
5.2.2 Battery cable cross-section, DC protective and disconnection devices 37
5.2.3 Connecting the battery 38
5.2.4 Earthing of battery 39
5.2.5 Precautions when using batteries 39
5.2.6 Battery temperature sensor connection (nx-tempSensor) 40
5.2.7 Battery with communicating BMS: CAN connection 41
5.3 Connecting the AC (Alternative Current) 44
5.3.1 Sizing of AC protective devices 45
5.3.2 AC Neutral and Earthing system 47
5.3.3 AC Commissioning 53
5.4 Connecting the Photovoltaic generator 54
5.4.1 PV string dimensioning 54
5.4.2 Connection 57
5.4.3 Earthing of PV 58
5.4.4 Cables and cross-section 59
5.4.5 Protection devices 60
5.6 Lightning protection 61
5.7 Connecting the Studer communications cables 62
5.7.1 Connection of the nx-interface 63
5.7.2 Connection to Internet 64
5.8 Wiring auxiliary I/O 65
5.8.1 Auxiliary contacts 65
5.8.2 Command Inputs 66

5.8.3 DRM function and command input 1 (AU-NZ version) ... 67
5.8.4 RS485i ... 68
5.9 Multi-unit configurations ... 69
5.9.1 AC in multi-units ... 70
5.9.2 Battery in multi-units ... 71
5.9.3 Extension of an existing installation ... 72
6 SPECIAL CONFIGURATIONS ... 73
6.1 AC-coupling ... 73
6.1.1 General system design ... 73
6.1.2 AC-coupling with frequency shift ... 74
6.2 External Bypass for redundancy ... 74
6.2.1 Simple manual bypass ... 76
6.2.2 Automatic bypass ... 77
6.2.3 Operation with a power meter ... 78
7 POWER-UP OF THE EQUIPMENT ... 79
7.1 Front panel Button ... 79
7.2 Front panel LED indicator ... 80
7.3 Beep indicator (Buzzer) ... 82
8 INTERFACES: NX-INTERFACE, WEB, PORTAL ... 83
9 COMMISSIONING ... 84
9.1 Initial configuration ... 84
9.2 Minimal commissioning information ... 85
10 OPERATION OF THE NEXT3 ENERGY SYSTEM ... 86
10.1 AC-Source ... 86
10.1.1 Special AC-source Settings for Grid ... 86
10.2 AC-Loads ... 91
10.3 AC-Flex ... 91
10.4 Solar PV ... 92
10.5 Battery ... 94
10.5.1 Energy management of the battery ... 95
10.6 Device and I/O: Aux contacts, Inputs and communication ... 98
10.6.1 AUX-contacts settings ... 98
10.6.2 IN-CMD settings ... 99
10.7 Behaviour in problematic conditions ... 100
10.7.1 Thermal behaviour ... 100
10.7.2 Overload ... 100
11 MAINTENANCE OF THE INSTALLATION ... 101
12 TECHNICAL DATA ... 102
12.1 Deratings with temperature ... 104
12.2 Autralian labelling ... 106
12.3 Security categories ... 106
13 PRODUCT RECYCLING ... 107
14 CONFORMITY ... 107
14.1 Grid code conformity ... 107

1 INTRODUCTION

Congratulations! You are about to install and use equipment from the Studer NEXT range. You have chosen a high-tech converter that will play a central role in the energy production of your solar electrical installation. The next3 has been designed to work as a solar battery charger and hybrid inverter working in both modes "**off-grid**" and "**on-grid**". Its advanced and completely configurable functionalities will guarantee the perfect functioning of your energy system in any situations.
The NEXT range is a family of hybrid inverters, with or without included solar chargers. All models are designed with Swiss quality to have outstanding performances in offgrid and ongrid applications.
When the next3 is connected to batteries and photovoltaic panels, it automatically recharges batteries with all the available solar power. According to the selected programming, the solar can be injected to the grid or used for self-consumption only. The accuracy of the Maximum Power Point Tracking (MPPT) algorithm, the high output and low internal consumption ensure an optimal valorization of the energy produced by the PV modules.
The battery charge profile may be set freely according to the battery type or the operation mode. The charging voltage is corrected depending on the temperature thanks to the external sensor nx-tempSensor. If using lithium batteries, the next3 communicates with battery BMS through a CAN-bus and ensure an optimal operation according to the manufacturer of the battery.
The control, display and programming unit nx-interface allows an optimal setup of the system and guarantees the user permanent control over all important parameters for the installation. Moreover, it enables the recording of the system data to analyze later its functioning (data logging). The nx-interface is also the communication gateway to connect the energy system to the remote monitoring web portal https://portal.studer-innotec.com for distant supervision. The remote supervision can also be done with the APP Studer Monitoring, available for both IOs and Android.
The next3 operates as an independent device and is also designed to be included into a Studer energy system together with other NEXT compatible devices, display modules and the communication modules.
The parallel operation of several inverters is possible and offers modularity and flexibility enabling an optimum dimensioning of your system according to your energy requirements. Working together, these different devices have a synchronised behaviour for a better management of the battery and of the solar resource. The next3 is available in models without the solar charger or without the AC-transfer to fit in various types of systems.

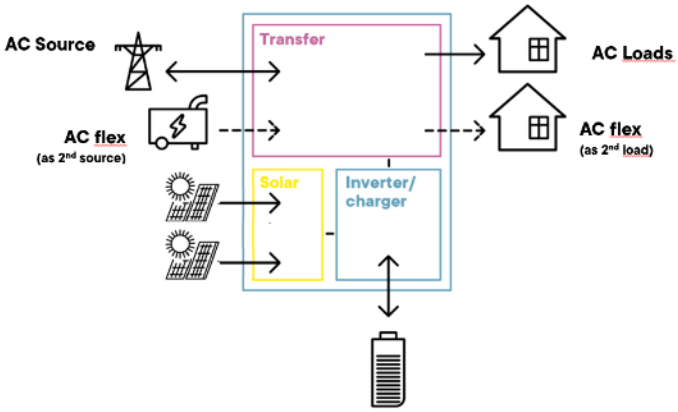

Please read this manual carefully to ensure the perfect start up and operation of your system. It contains all the necessary information regarding the operation of the next3 charger. The installation of such a system requires special expertise and may only be carried out by qualified personnel familiar with the local standards in force.

2 GENERAL INFORMATION

2.1 IMPORTANT SAFETY INSTRUCTIONS

This manual contains important safety instructions. Please carefully read the safety and operation instructions before using a next3 device. Take into consideration all the warnings mentioned both on the equipment and in this manual, following all the instructions regarding the operation and use.
The installation and commissioning of the next3 must be entrusted to qualified personnel. The installation and use must comply with the local safety instructions, laws, and standards in force in the country.

Do not excess the maximum rated characteristics of the equipment shown on the Type label and in the datasheet.

HIGH-VOLTAGE DC AND AC INSIDE THE DEVICE: DANGER OF DEATH

When the next3 is under operation, it generates voltages that can be potentially lethal (up to 900Vdc and 400Vac). Any work on or close to the installation must be carried out only by thoroughly trained and qualified personnel. Do not try to carry out ordinary maintenance on this product yourself.
The next3 is in overvoltage category III (OVC III) on AC side, in accordance with the safety standard IEC/EN 62109-1. It is in overvoltage category II (OVC II) for the PV connection and in overvoltage category I (OVC I) for the battery connection.

While working on the electrical installation, it is important to make sure that the source of DC voltage coming from the battery as well as the source of DC voltage coming from the photovoltaic generator, have been disconnected from the electrical installation.
Be also certain the sources of AC voltage coming from a generator or network have been disconnected from the electrical installation.

Even when the next3 is disconnected from the power sources, a potentially dangerous voltage may remain at the terminals. To eliminate this, you must wait **for at least 120 seconds** to allow the electronics to discharge.

After disconnection, check all the terminals voltage with a multimeter in AC and DC modes. The connections compartment can then be opened, and the task carried out safely. All other cover parts of the device shall never be opened without written authorization of Studer Innotec SA company.

The next3 can be installed at altitudes up to 3000m. For installations at higher altitudes, please contact Studer Innotec SA.

If the next3 is used in a manner not specified in this manual, the protection provided by the next3 may be impaired.

Nobody is authorized to proceed with any change, modification, or repair of the equipment without the prior written authorization of Studer Innotec. Use only original parts for any authorized modification or replacement.

2.2 QUALITY AND WARRANTY

During the production and assembly of the next3, each unit undergoes several checks and tests which strictly comply with established procedures and device safety requirements. The manufacturing, assembling, and testing of each next3 are entirely carried out in our factory in Sion (CH). The warranty for this equipment depends upon the strict application of the instructions in this manual.
You can download the current warranty conditions from the Internet at www.studer-innotec.com.

2.2.1 Exclusion of warranty

No warranty claims will be accepted for damages resulting from handling, use or treatment that are not explicitly mentioned in this manual. Damages arising from the following causes are excluded from the warranty:

- Voltage higher than 900V across PV terminals.
- Voltage higher than 70V across battery terminals.
- Use of the device outside of the specification of the product.
- Accidental presence of liquids in the equipment or oxidation due to condensation.
- Damage resulting from falls or mechanical shocks.
- Modifications carried out without the explicit authorization of Studer Innotec.
- Nuts or screws that have been too much or not enough tightened during the installation or maintenance.
- Damage due to atmospheric surge voltage (lightning).
- Damage due to inappropriate transportation or packaging.
- Damages due to improper installation
- Disappearance of original identification marks.

ℹ	Never take off or damage the rating plate showing the serial number. It enables to check and follow-up the data specific to each equipment and is vital for any warranty claim.

2.2.2 Exclusion of liability

The installation, commissioning, use, maintenance, and servicing of the next3 cannot be subject of monitoring by Studer Innotec. Therefore, we disclaim all responsibility and liability for damage, costs or losses resulting from an installation that does not comply with the instructions, faulty operation or inadequate maintenance. The use of Studer Innotec equipment is in any case under the responsibility of the customer.
This equipment is neither designed nor guaranteed to supply installations used for vital medical care nor any other critical installation entailing potential risks of important damage to people or to the environment.
We assume no responsibility for the infringement of patent rights or other third parties' rights resulting from the use of the inverter.
Studer Innotec reserves the right to make any modifications to the product without prior notification.
Studer Innotec is not liable for incidental, direct or indirect damages of any kind, including any profit loss, revenue loss or damage caused to equipment or goods due to defective equipment.

The next3 is certified for various grid codes. The installer is responsible for setting the proper grid code at commissioning according to the local regulation. Studer Innotec SA doesn't assume any responsibility for modification of grid code or individual settings concerning that subject. Those settings are protected by a user code that is not public (Expert mode).

2.3 CONVENTIONS

2.3.1 Glossary

AC: Alternative Current
AC-Load: The AC-Load is a physical connection for the electrical loads. It is separated from the grid in case of grid failure and backed up by the inverter. The connection is 3 phases and neutral. Single phase load can be connected.
AC-Flex: The AC-Flex is a physical connection for 3 phases and neutral. It can be configured for a use as a secondary AC source, or for a use as a controlled secondary AC load.
AC-Transfer: with "transfer" we mean the fact that the AC-Source is connected to the AC-Loads with the internal relays of the next3. The input voltage is "transferred" to the output.
PE: Protective Earth
Solid neutral: when the AC-Source and the AC-Loads neutral are physically connected with a bridging cable.
Transfer: have a transfer means be connected to the AC-source with the internal relay. The inverter switch to a current source mode.
Multi-unit system: a system with several next3 units running in parallel and synchronized with the communication cable.

2.3.2 Symbols and conventions

	This symbol is used to indicate safety instructions, which, if not followed, could result in a risk of electrical shock with possible serious personal injury or death to the operator or the user.
	This symbol is used to indicate a risk of material damage and/or the cancellation of the guarantee.
	This symbol is used to indicate a procedure or function that is important for a safe and correct use of the equipment. Failure to respect these instructions may lead to the cancellation of the guarantee or to a non-compliant installation.
	This symbol placed on the product indicates that its surfaces may reach temperatures higher than 60°C.
	This symbol placed on the product indicates that its use must follow the instructions in the user manual.
	PE= protective earth (connected to the enclosure of the device).
	For information specific to the Australian model of the nx3 to be compliant with the standards AS/NZS 4777.2. This is used for the New Zealand as well.

2.4 ABOUT THIS USER MANUAL

This manual contains all the necessary information and procedures to install the next3 hybrid inverters. For the interface use, the nextOS manual is an important complement. An online user manual and applications notes are available at: https://technext3.studer-innotec.com

A summary is provided in the Quick Installation Guide, delivered with the product in a printed version.

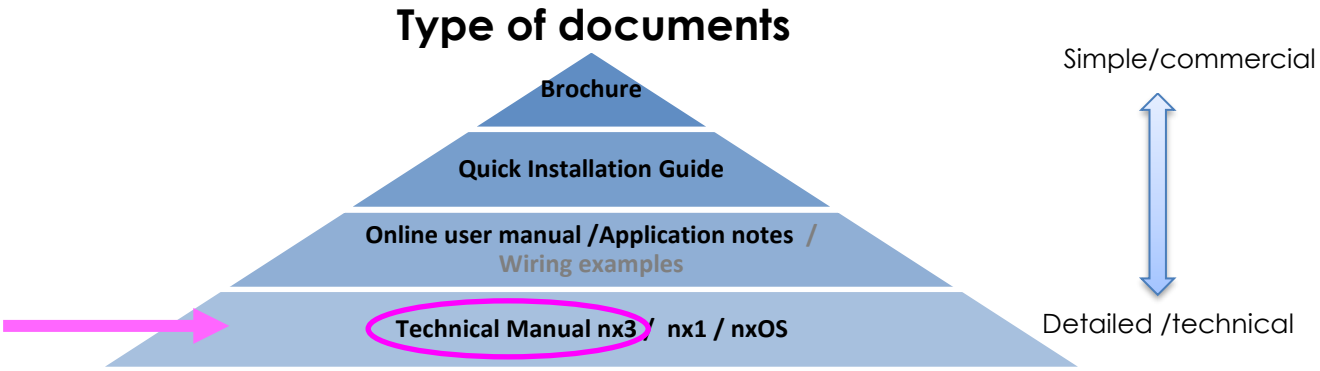

This manual does not contain information about photovoltaic modules (PV) or batteries of various brands that can be connected. For this kind of information, please refer to the instructions of each specific manufacturer.

It does not contain specific information on national rules/regulations about electrical installation. It contains only safety requirements about the use of the device next3 according to following International and European standards; IEC/EN 62109 for power converters used in photovoltaic systems and IEC/EN 62477 for power converters used in general systems.

This manual covers the next3 following models and accessories:

- Hybrid inverter charger ***nx3 16000-48*** (with any options) with software version to **1.4.0.0**
- Interface: ***nx interface*** with software version up to **1.4.0.0**
- Battery temperature sensor: ***nx tempSensor***

ℹ	The latest version of the manuals can be downloaded on Studer website: https://www.studer-innotec.com © The content of this manual is copyrighted by Studer-Innotec SA, Rue des Casernes 57, 1950 Sion, Switzerland

3 ESSENTIALS TO KNOW ABOUT A NEXT3 SYSTEM

The next3 is a hybrid inverter charger, that can work in a stand-alone (offgrid) mode or connected to an external AC source, being a grid or a generator.

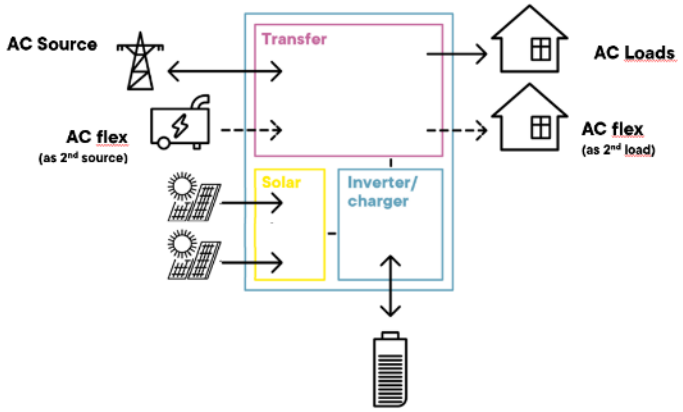

A few concepts must be understood to use and configure the next3 systems properly:

- The next3 has a connection named "**AC-Source**" where comes the main AC source: the grid or a generator.
    - This input has a high security level, with doubled security relays for disconnection according to new international grid code and safety standards (for example: IEC 62109, VDE-AR-N 4105, EN 50549-1, …). In case of connection to a distribution grid, always connect the grid to AC-Source.
    - The choice to use AC-source to connect to the grid or to a genset is done during the first configuration of the system. It cannot be change 'live', while the system is working, and would need a complete reset of the system if you want to change it. The behaviour of the next3 is different with a grid or with a genset.
    - The grid code choice must be set properly by the qualified installer during commissioning according to the local requirements of the DSO (Distribution System Operator). This is done during the wizard process. It can only be changed with a complete reset of the system and restart of the wizard process. The access code "Expert" that enable access to the wizard after the first commissioning is not public for this reason.
    - AC-source works with three-phased grid only if a grid code is selected because (all) grid codes ask to have the proper 3 phases for 3-phased systems. Operation on a single phase is not allowed. Operation on a single phase is possible if a genset is selected as source during the wizard.
    - There is only one connection to one AC-source in a system even in a multi-unit system when there are physically multiple connections.
        - Transfers are never used in parallel and only one transfer switch will be operated. That means the max transfer current is 80A even with 3 next3 in parallel.
        - The identification of which AC input is used in multi-system is done during the wizard configuration process.
    - The next3 is an "offline UPS", that means the AC main is supplied directly to the load with the internal transfer switch (no double conversion). This implicate that the voltage and frequency of the grid is the same on the loads side.

The maximal current/power taken from the AC-Source can be controlled in order to cope with limited connection (per example max amps of the grid connection). The next3 can compensate with battery power with the Smart-Boost function.

- On the other side, it has a connection named "**AC-Loads**" where the load/consumption is connected, that are supplied by the batteries/solar when there is no grid or genset.
    - There is only one AC-load in a system: in multi-units all the AC-loads output must be electrically connected. All next3 work together to create a single voltage (distribution

panel).

- The choice to operate "**AC-FLEX"** as a connection for a genset as source or for controllable loads is done at first configuration and cannot be changed (like for the AC Source).
    - Similar to the AC-source, there can only be one AC-Flex as source used in a system.
    - In case it is used as source, the priority can be chosen with a system setting: first one valid that comes in, AC-source or AC-flex.
    - In multi-unit systems the AC-flex connections must not be wired in parallel. The programming of the AC-flex as load are independent for each next3 (slide left and right on the screen to access each individually). The programming is done for each phase L1, L2 and L3 independently. That means for a multi-unit system with 3 next3, there can be up to 9 single phase controllable loads used.

3.1 UNDERSTAND THE GENERAL ENERGY STRATEGY

The next3 is a renewable energy friendly converter and always try to optimize the solar in the system. The energy management between all the converters and components of the energy system is done by the *Power Flow Dispatcher* algorithm. This is at the core of the next system.

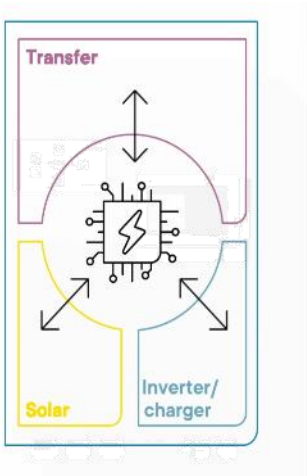

Studer simplified the use of its product to be transparent to most of the end -user. Four standard energy strategies are available and can be selected during the configuration process in the wizard with only two questions to answer:

- is grid feeding allowed? This question is asked only if you have selected "grid" as connection to AC-source. If you selected "genset", the grid feeding is forbidden.
- Is battery used for solar self-consumption optimization? That means the battery is used daily as energy buffer. Solar energy recharges the battery and is used during the night.

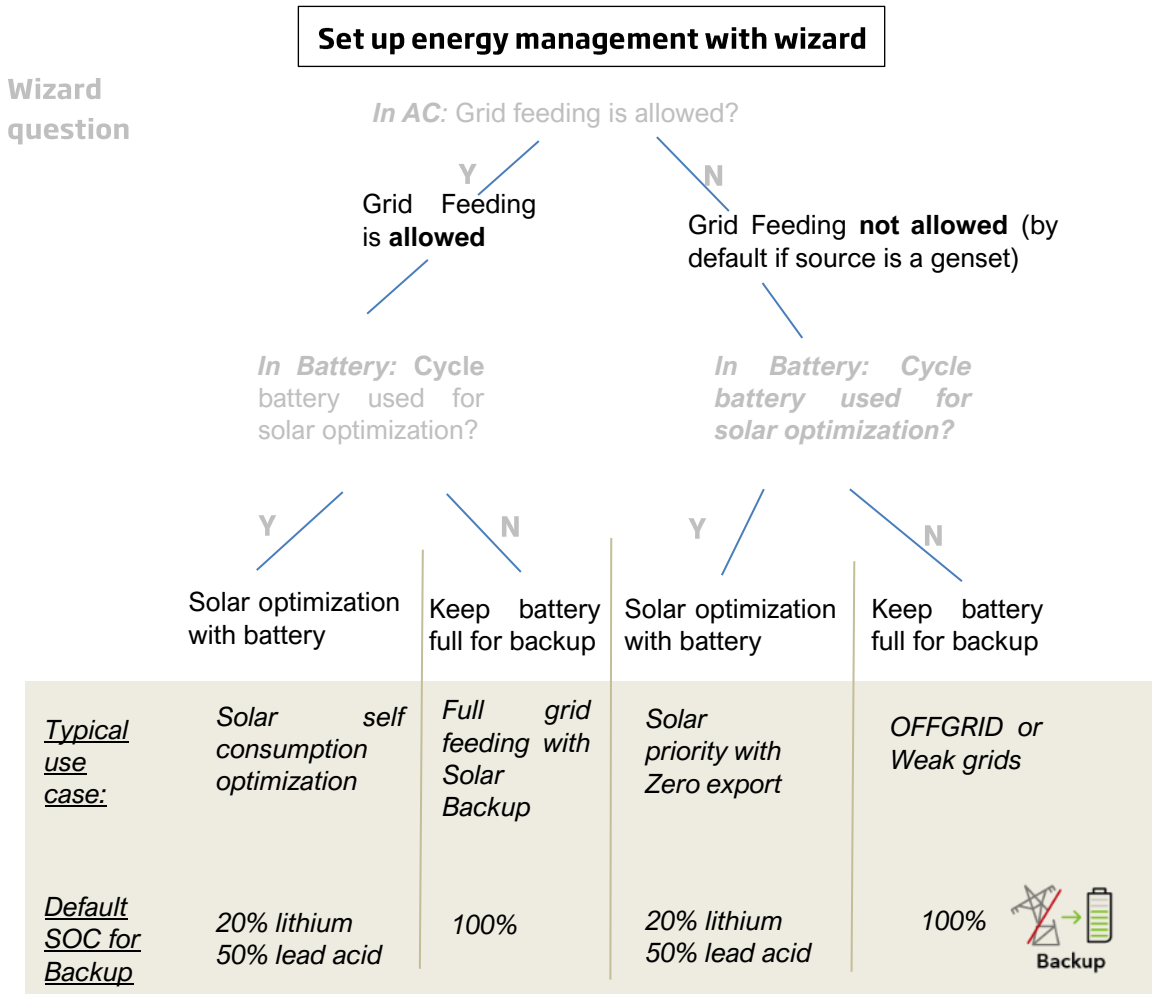

The 4 cases description, defined by those two questions are:

- Use of battery for **solar self-consumption optimization** until a state of charge (SOC) for Back-Up. During the night, the battery is discharged until the given SOC. Under the defined SOC level, a reserve is left in case of blackout. The default level is 20% to use 80% of the battery as buffer for lithium batteries and 50% for lead acid batteries. During the day, when the solar power is produced, that energy is used to supply the AC loads, charge the battery[1] and inject the excess energy to the grid.
- **Full grid feeding**: In this situation, the battery is kept full to be ready in case of blackout. The SOC for back-up is 100%. All the solar power produced supply the loads and the excess is injected to the grid.
- **Solar priority with zero export**. The solar power is used to charge the battery and to supply the loads but is never sent back to the AC-source. In that mode the grid-feeding is not allowed. The battery is used as buffer. When there is more solar than loads, the excess will charge the battery. When the loads are higher than the production, the energy is taken first from the battery. Only when it is at the lower threshold (SOC for Backup) the grid will be used. Like that, there is still some energy left in the battery to run some loads when a blackout happens. When the battery is full and the load is small, the MPPTs will reduce the production, causing some solar energy to be lost.
- **Offgrid or Weak grid:** AC-source is a genset or a grid where the injection is forbidden. The battery is charged to the maximum as soon as the AC source is present ensuring to have energy available in the next blackout event.

Note: in expert mode, it is possible to change the value of the "SOC for backup" setting.

[1] Battery is loaded up to the SOC for grid feeding level. SOC for grid feeding is 100% by default but it can be modified in advanced mode.

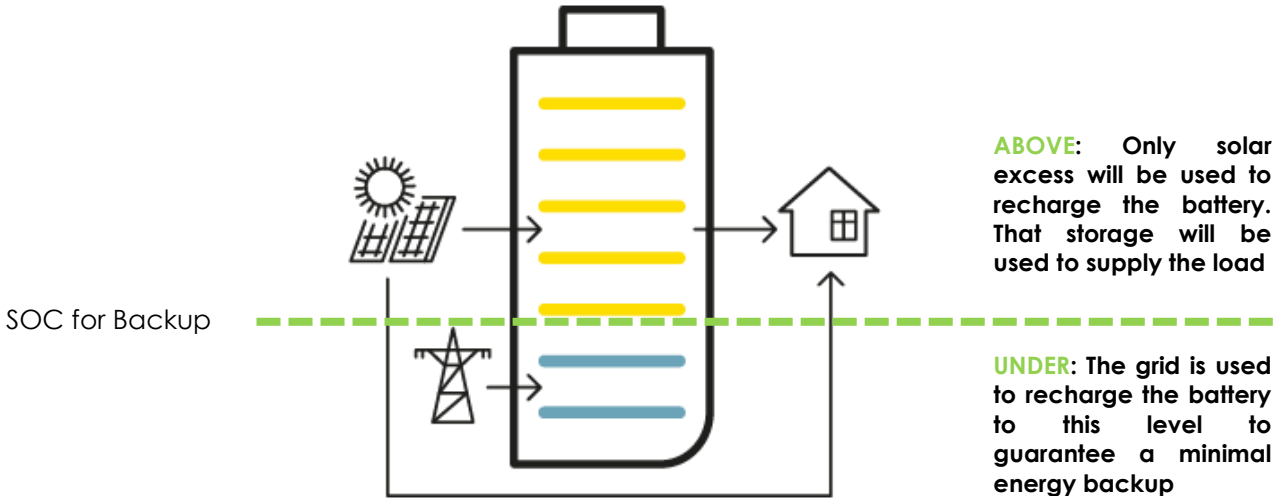

All the settings about this general behaviour are set during the "Wizard settings" process. For details about individual settings see the *AC-SOURCE* section and *Battery* section of this manual.

Comments about the State Of Charge (SOC) for backup
If the SOC for backup is set to 100%, the battery will be fully charged with the AC-source (when available) with a target voltage following the cycle (for lead acid: absorption, floating, …) or with the voltage given by the BMS.

If the next3 is in Smart-Boost due to a max current limit on the AC-source, the battery can be discharged below the SOC for backup and down to the SOC for end of discharge.

If the SOC for backup is lower than 100% the charging may stop before reaching the target voltage of the cycle. Voltage limits of the battery cycles are always used as boundaries in any case.
SOC for backup is modified in the battery configuration menu and is available to basic user. It is possible to change it at any time.

3.2 STANDARD USE CASES

Illustrations are provided below for the 4 basic use cases of the next3.

Grid connected installation with grid feeding allowed and use of battery for self-consumption optimization

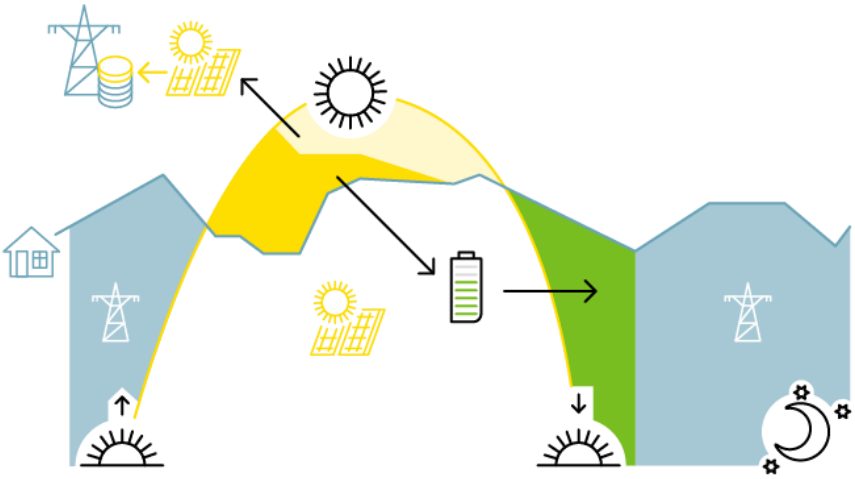

Typical answers in the Wizard:

- Grid: YES with grid feeding allowed
- Genset: NO
- Cycle battery: Yes

Default behaviour:

- Optimisation with battery use between 100% (SOC for grid feeding) and 30% (SOC for backup)
- If the grid is connected, the battery is charged only up to 30% with grid energy. Above that level, only the solar is used to fill the battery.
- Solar is used for the loads during the day as soon as SOC is above 30%.
- When the battery is full, excess is fed to the grid

Grid connected installation with full grid feeding; the battery is not cycled (kept for backup only)

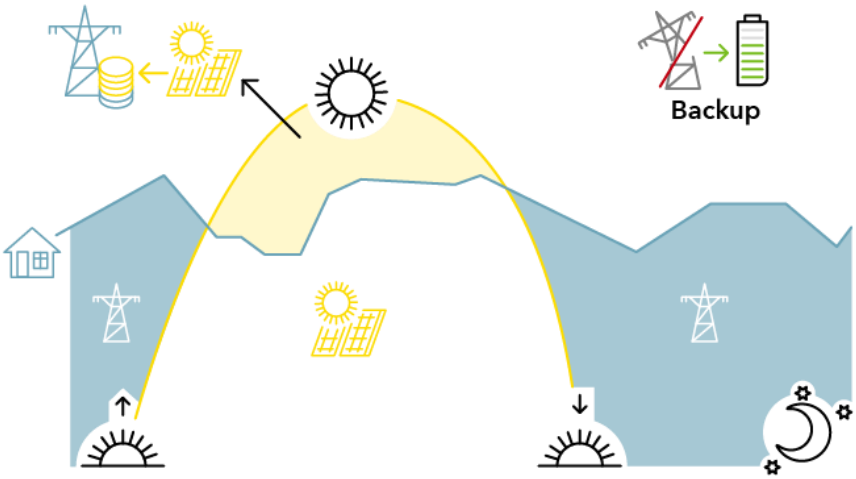

Answers in the Wizard:

- Grid: YES with grid feeding
- Genset: NO
- Cycle battery: NO

Default behaviour:

- If the grid is connected, the battery is fully charged to 100% to be ready for a blackout.
- Solar is used for the loads during the day and excess is fed to the grid.
- Next3 is like a grid-inverter when the grid is always on.

This is the configuration of UPS or backup use, with or without solar.

Solar priority without grid feeding: zero export solar backup

Answers in the Wizard:

- Grid: YES without grid feeding
- Genset: NO
- Cycle battery: NO

Default behaviour:

- Energy is never sent back to the grid.
- Solar is used for the loads during the day and to fill the battery, and excess is lost

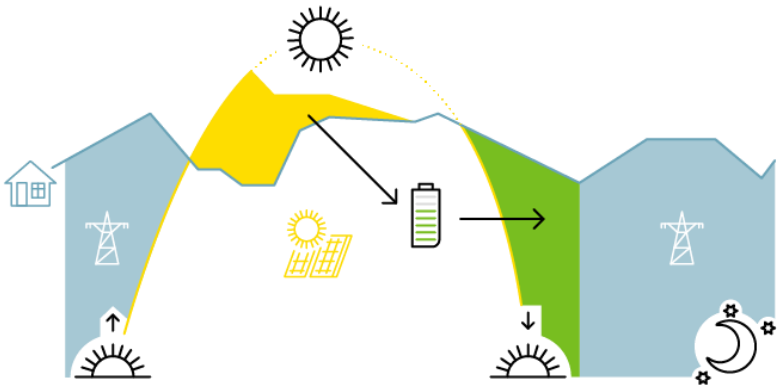

OFFGRID installation (back feeding on genset is forbidden!)

Answers in the Wizard:

- Grid: NO
- Genset: YES, on AC-source
- Cycle battery: NO

Default behaviour:

- Energy is never sent back to the genset.
- As soon as the genset is ON, the batteries are charged.
- Solar is used in priority for the loads during the day

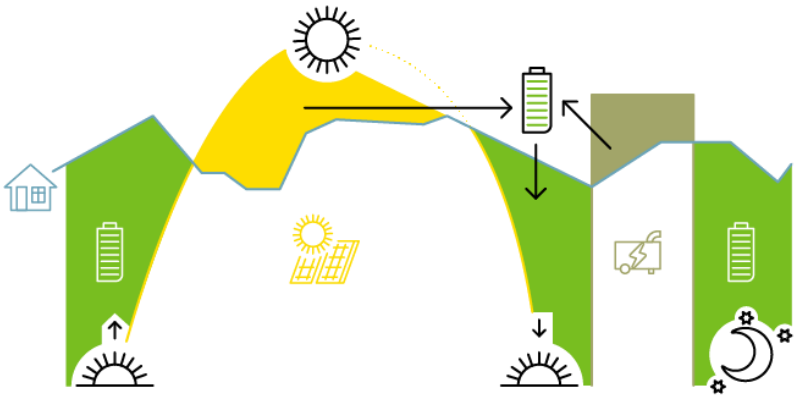

During operation, all the limits and constraints are automatically managed by the NX3. Power production and storage is optimally dispatched in the system due to the OPFD technology (Optimal Power Flow Dispatcher).

4 HANDLING AND MOUNTING

4.1 HANDLING AND MOVING

The weight of the next3 with the package is about 60kg. Use an appropriate lifting method as well as help from a third party when installing the equipment.

4.2 STORAGE

The equipment must be stored in a dry environment at an ambient temperature between -20°C and 60°C. Store it in a location where it is to be used a minimum of 24 hours before commissioning to avoid thermal shocks and condensation problems.

4.3 DIMENSIONS

4.3.1 Dimensions of wall mounted next3

The next3 must be installed vertically. Distances of at least 12cm around the units and 25cm above the equipment are required to guarantee adequate ventilation (see mounting section of this manual).

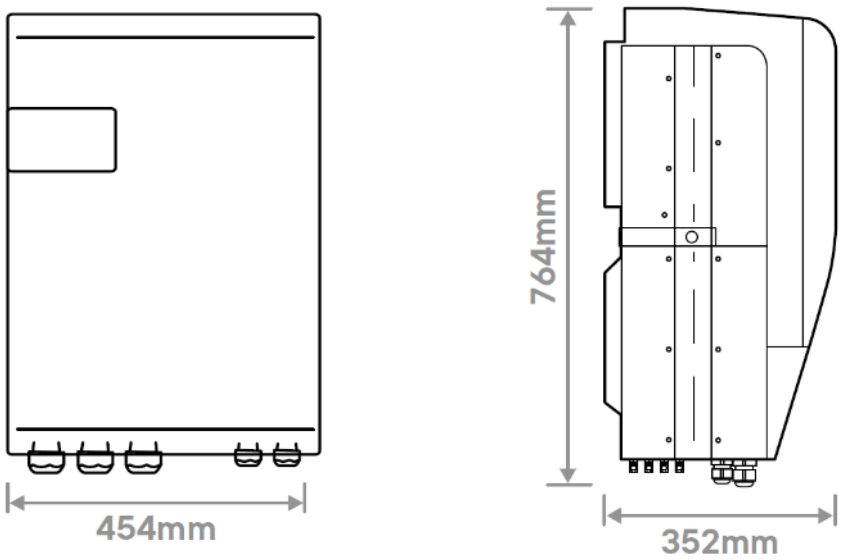

2 removable handles on each side of the device can be screwed to help the lifting of the device and then leave adequate space for them. Never lift the device by handling the plastic cover part!
If the next3 is installed in a closed cabinet, it must have sufficient ventilation to guarantee that the ambient temperature is kept within the operating limits of the next3.

4.3.2 Dimensions of the 19'' rack next3

The rack version of the next3 is for 19'' rack and has the equivalent of 8 units in height.

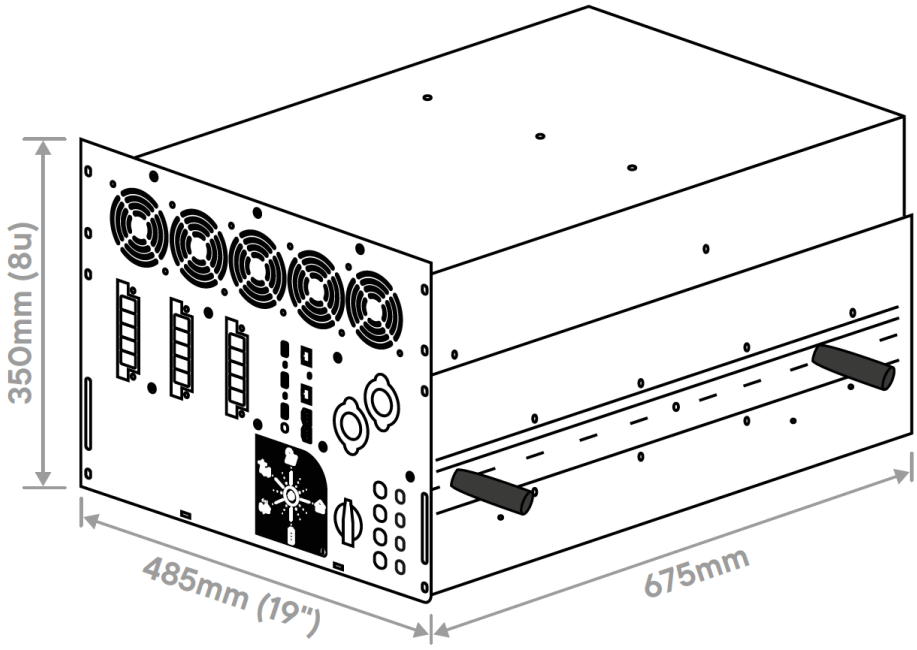

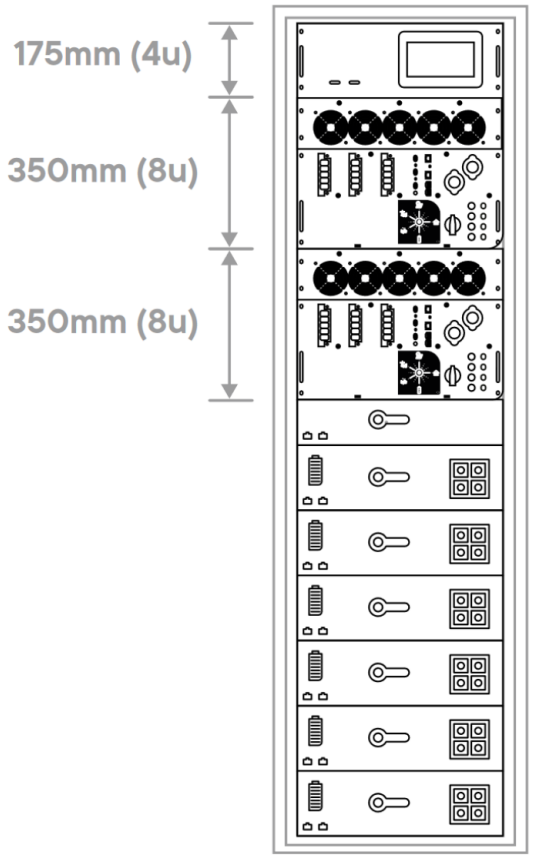

4.3.3 Dimensions of the nx-interface

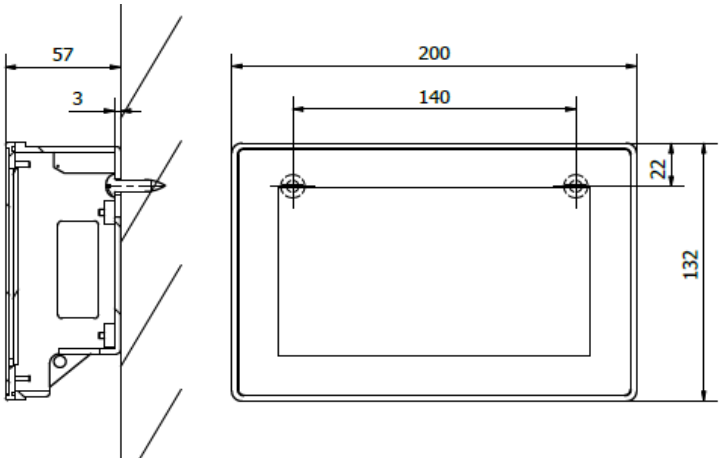

The nx-interface can be fixed on the inverter with dedicated mounting frame or remotely wall mounted. It can also be integrated on a control panel. See the mounting section for details of installation.

See the Wiring chapter for cabling of communication.

4.4 UNPACKING AND MOUNTING

When unpacking, check that the next3 has not been damaged during transport and that all accessories listed below are present. Any fault must be immediately reported to the product distributor or the contact mentioned at the back of this manual. Carefully check the packaging as well as the next3.

Contents:

- Quick Installation Guide and user interface guide
- Next3 inverter-charger
- Nx-interface with
  - Mounting structure
  - USB stick with detailed technical manual, to be used for datalogging with the nx-interface.
  - Kit for front panel fixing
  - 1m communication cable
- Sunclix connectors for PV cables (4 pairs)
- Male connectors for
  - CAN lithium battery communication
  - RS485
  - 2 pieces for AUX contacts
  - 1 piece for CMD inputs
- Temperature sensor nx-tempSensor (with male connector)
- Mounting plate (for wall mounted version) with 1 screw for fixing on the body of the next3. The screws for the wall are **not** provided. Choose the appropriate screws for your wall.
- Fixing belt with 2 screws
- 4 handles
- Cable-glands for battery and AC (for wall mounted version)

4.4.1 Mounting place: environmental factors

Next3 is designed for indoor use (IP20) and the place of installation must satisfy the following criteria:

- Protected from any unauthorised person.
- Protected from water and dust and in a place with no condensation.
- It must not be situated directly above vented lead acid batteries, or in a cabinet with it, due to corrosive gas.
- No easily inflammable material should be placed directly underneath, behind or close to the next3.
- Ventilation holes must always remain clear and be at least 20cm from any obstacle that may

affect the ventilation of the equipment (see mounting schematics).
- In mobile applications, it is important to select an installation site that ensures the lowest possible vibration level.
- According to the IEC/EN 62109-1 standard, the level of pollution at the mounting place should not exceed PD2 (second-degree environment), which means that there can be pollution as long as it becomes not electrically conductive and non-flammable.
- Protected from direct solar radiation or heat sources.

As much as possible, reduce exposure to sudden temperature variation: important heat variation may create undesired and harmful condensation inside the equipment.

The next3 is qualified at 25°C ambient temperature.

4.4.1.1 Thermal behaviour

The next3 is rated at 25° ambient temperature with proper ventilation (space around the next3). It has several internal temperature measurements and performs a derating of its functionalities in case of overheating. There is a temperature derating of the power capacity in function of the ambient temperature. The derating starts around 35°C for the solar production as seen below:
- The solar production is reduced from the maximal current of 20A down to 0A to stabilize the temperature to an acceptable level.
- The battery charging and discharging current is reduced to stabilize the temperature.
- The inverter max power is limited:
    - In island mode, the power is directly given by the loads. If the max current is reached, the voltage drops because the inverter cannot supply the load. When the voltage goes under a voltage threshold of nominal power -10%, the inverter goes to overload.

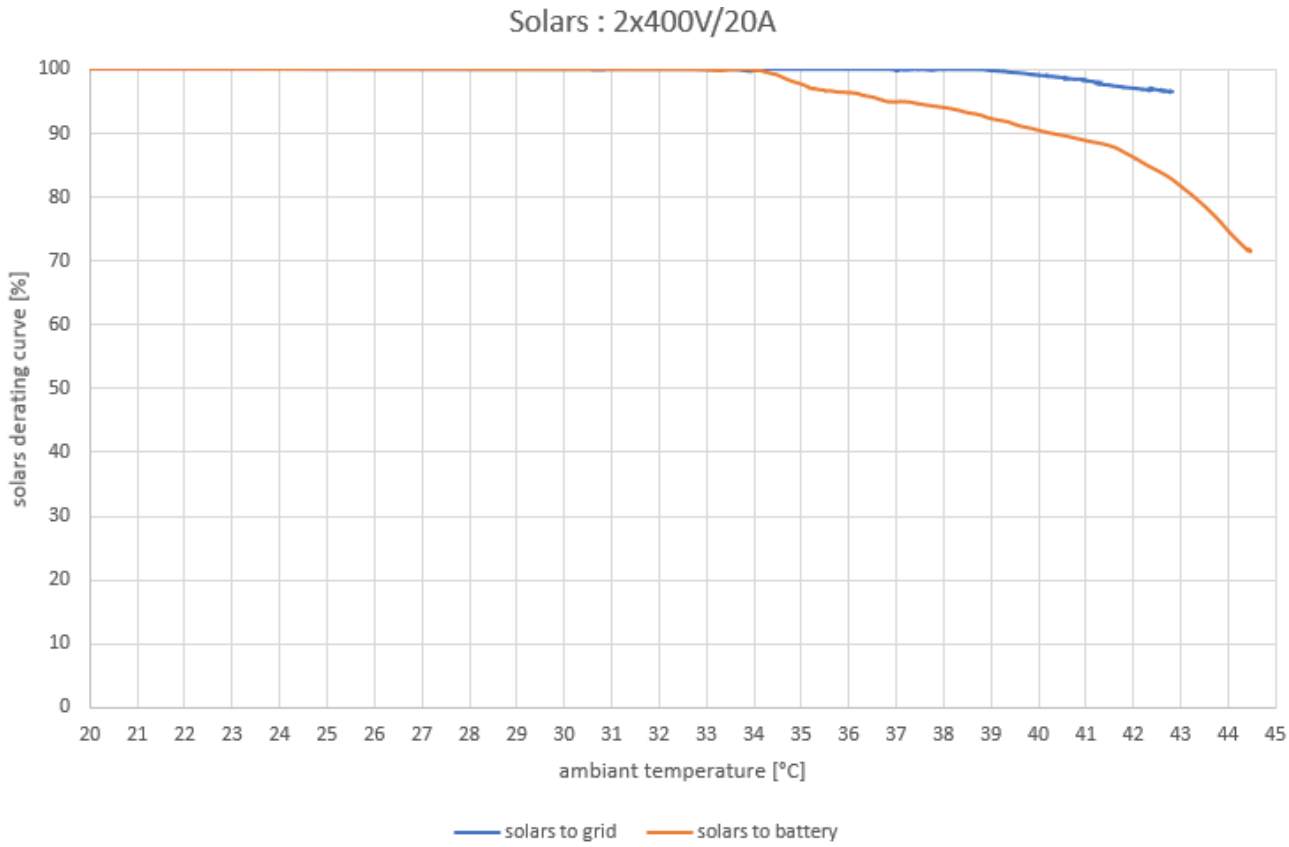

A message indicates if the performances are limited by temperature.

4.4.2 Unpacking and mounting process of the wall mounted next3

Unscrew the 8 screws situated on the side of the casing.

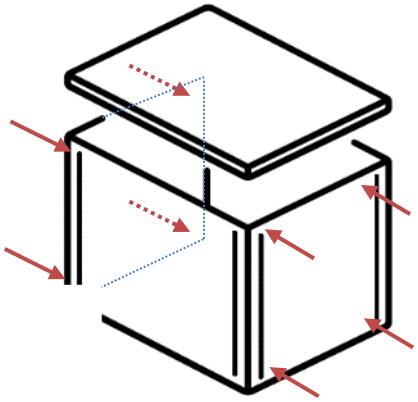

Remove top cover.
Take the manual, the fixation structure, check the content.

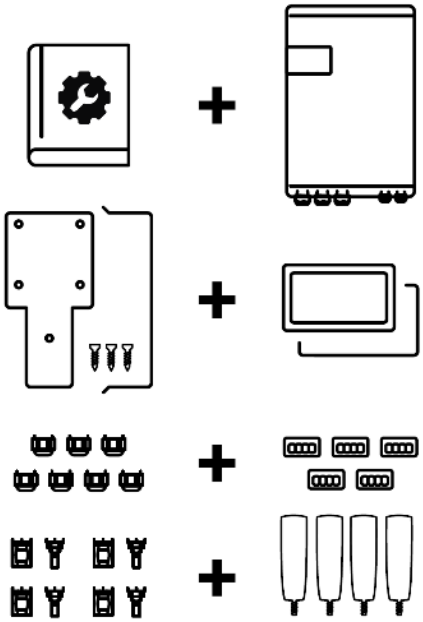

Remove the external casing

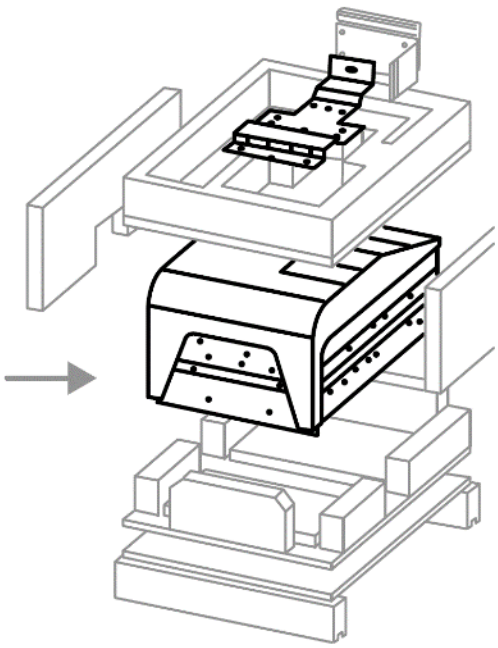

cut the strings maintaining the next 3 to the bottom of the casing.
fix the 4 handles on the two sides of the next3 and remove the loops if you don't need them to move the next3.

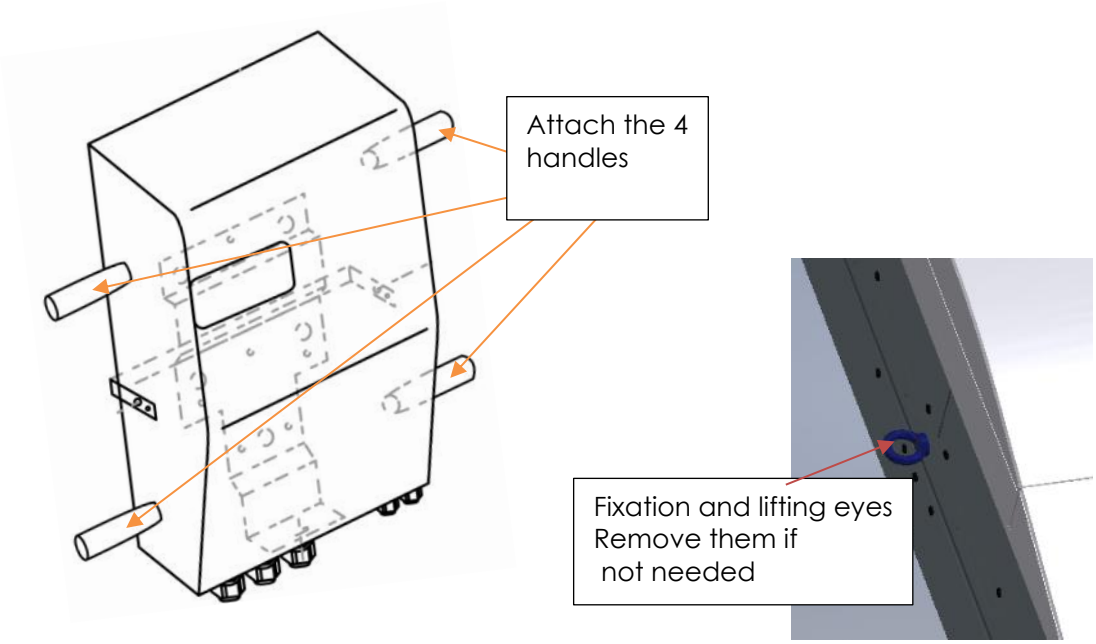

Fix the mounting plate on the wall, leaving enough space around the unit for the ventilation and cabling. The next3 must be installed on a non-flammable wall or support. Don't forget to put the fixing-belt in place before screwing the mounting plate on the wall:

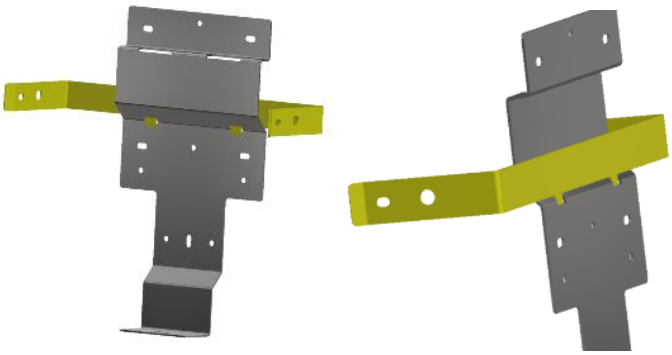

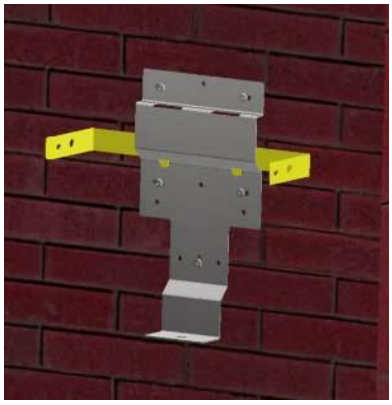

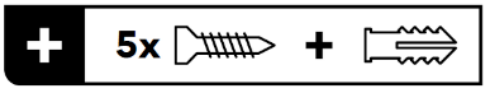

Those are not provided in the package, select the proper screws for your wall type and ensure a solid mounting.
The diameter of the holes in the plate are meant for 8mm screws.

In vehicles (road or marine), or when the support undergoes significant vibrations, the next3 is to be mounted on anti-vibration elements. The fixing belt use is mandatory in those cases.

For the wall mounting plate, use the 5 screws and buffers capable to stand the weight of the inverter in full safety.
When drilling the holes, keep at least 542 mm from the top screws to the ceiling to respect the 250mm clearance above the device.
Keep at least 290mm to the nearest on the left wall (150mm+454mm/2-90mm=287mm) and 350mm to the next next3 (120mm+454mm/2=347); distance from the middle of the plate.
Keep sufficient space below for the cabling.

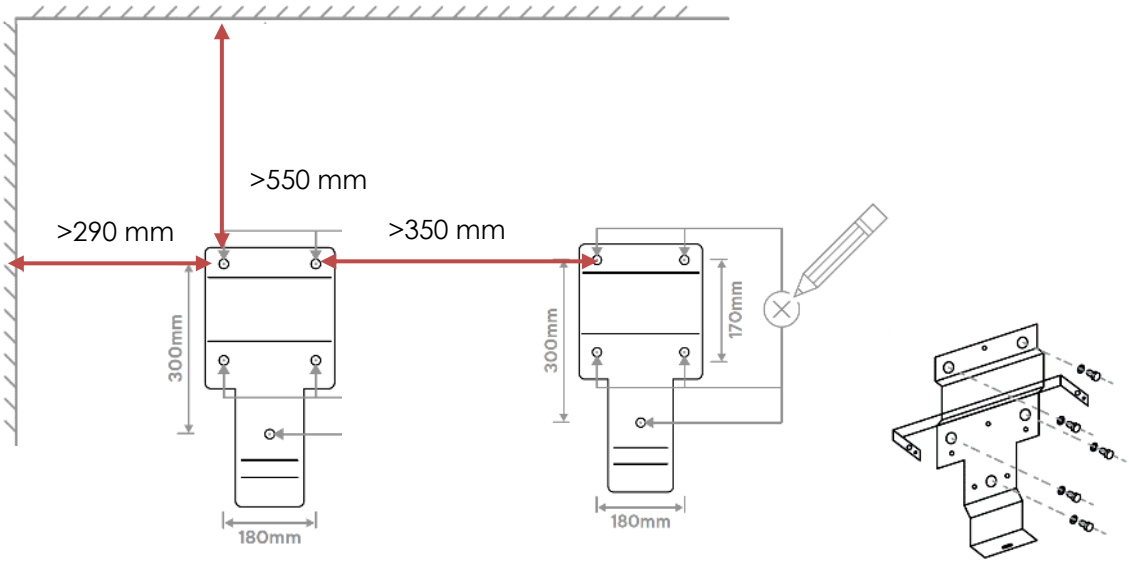

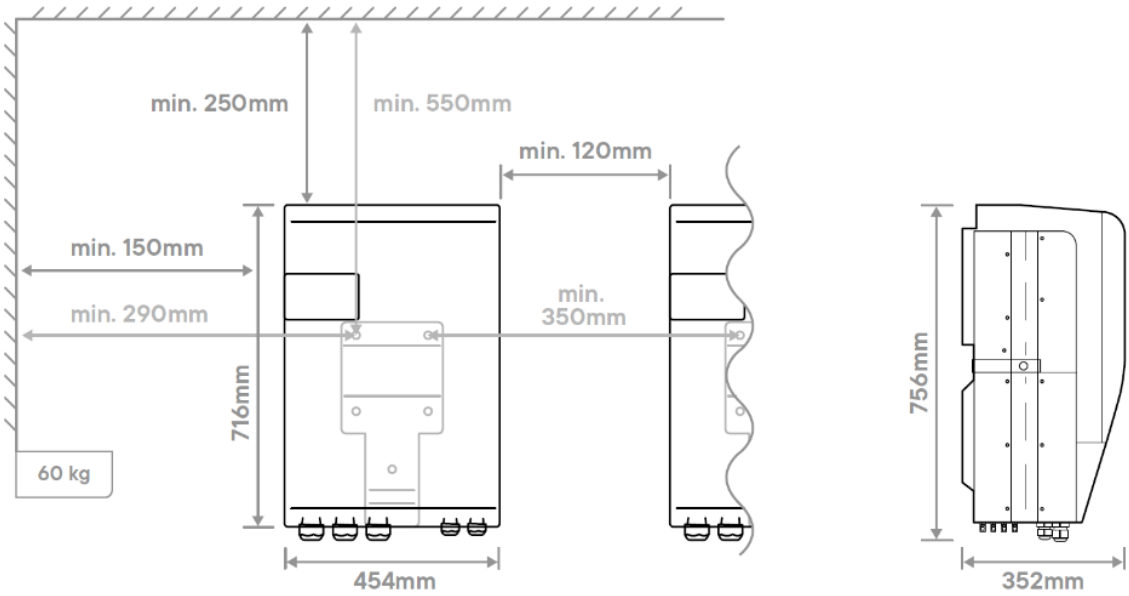

⚠	The next3 is a heavy equipment (~60kg) and must be mounted to a support/structure designed to bear such a load. It is imperative to ensure a complete and safe fastening of the equipment. If simply hung, it may fall down and cause severe damages.

For the next steps there must be 2 people at least!

Hang the next3 on the structure

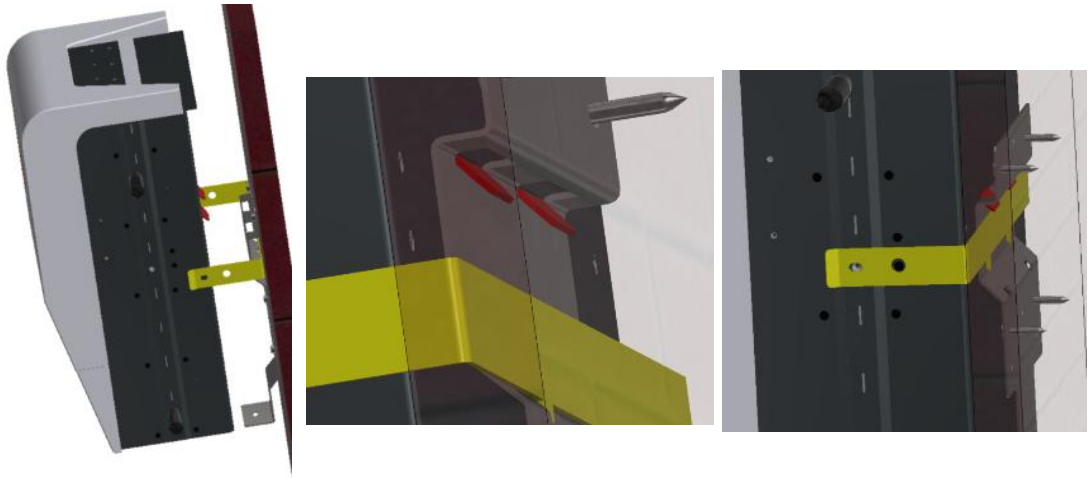

Fix the structure at the bottom with the provided screw
Fix the belt on the sides with the screws provided

Fix the nx interface with 2 screws provided. Install the communication cable on the screen before mounting.

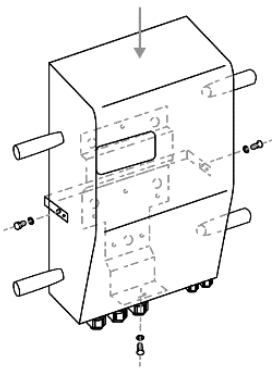

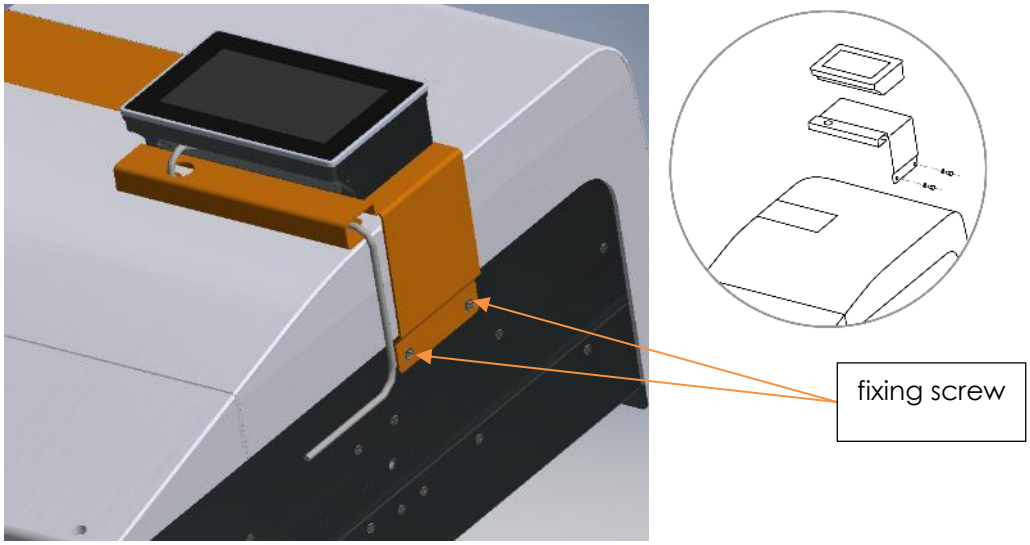

The nx-communication cable goes in the plug on the left of the nx interface and is easier to install before the mounting on the nx device. The ethernet cable (LAN) goes on the right.

See the wiring sections for details.
Special installation on the wall or in a cabinet is shown in the following chapter below.

Open the bottom panel and proceed to wiring.

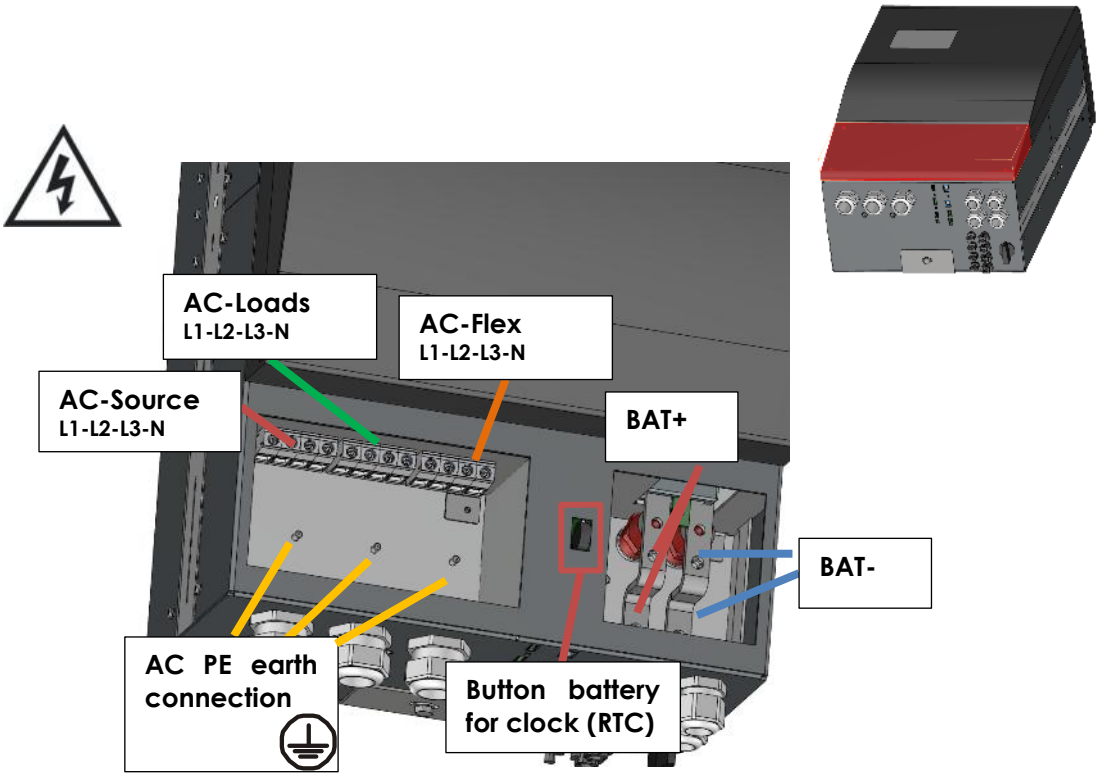

Go to the wiring section of this manual for all explanations about electrical connexions.

4.4.3 Unpacking and mounting process of the rack next3

The first steps of the unpacking of the rack version is similar to the wall mounted version. The same packaging is used.

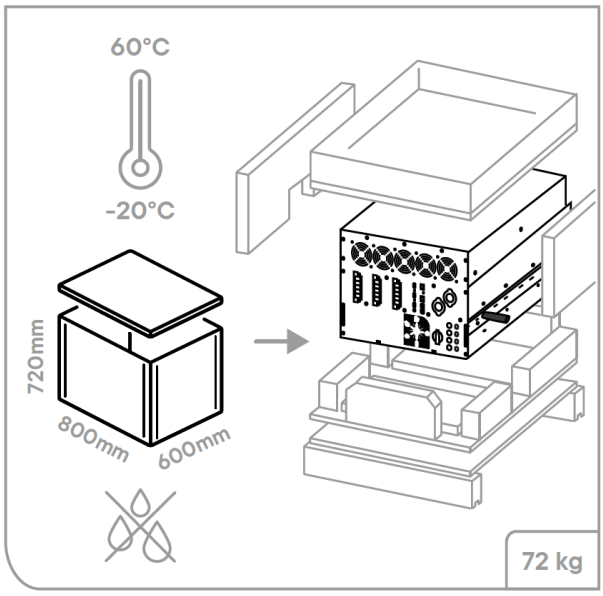

The mounting in cabinet must be performed leaving sufficient space in front and behind the units. If a closed cabinet is used, some extraction fans must be used to evacuation the heat of the power conversion losses.

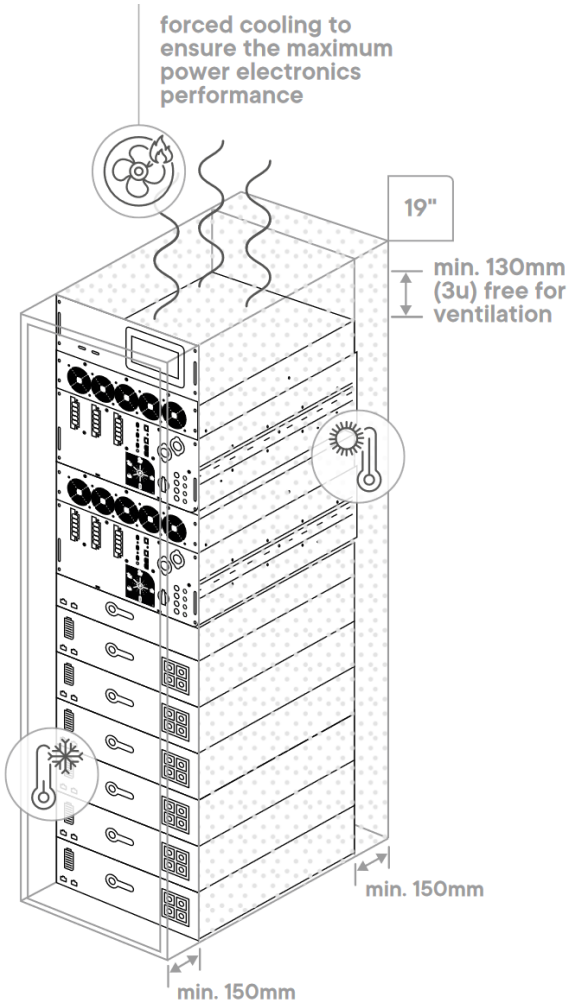

Go to the wiring section of this manual for all explanations about electrical connections.

4.4.3.1 Nx-interface wall mounting

The nx-interface can be hanged on a wall with two screws. The head of the screw goes in the dedicated slot on the back of the nx-interface.

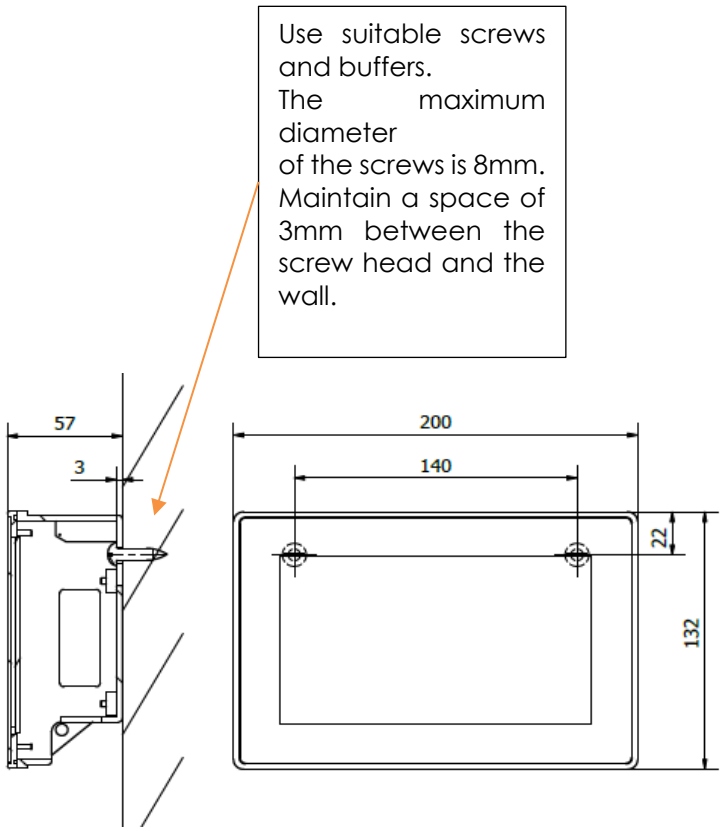

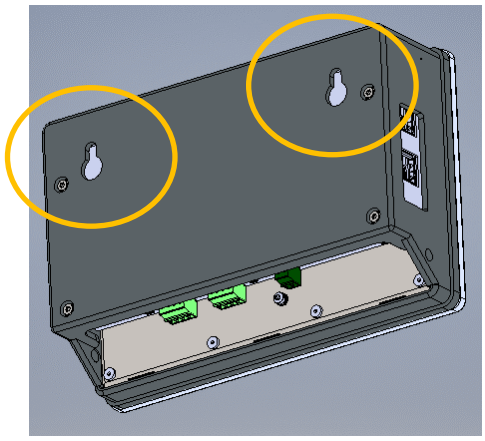

	nx-interface is supplied with a 1m communication cable to mount on the device. Cables of different lengths (3m, 10m and 50m) can be ordered. Item reference is: *nx-ethernetCab 3m/10m/50m*. The length in meters is specified in reference. You can buy your own ethernet cable for communication; it must be ethernet cat5 with 26AWG. The maximal distance between the inverter and the nx-interface depends then on the rest of the cabling. The total communication cable length in one system for the Studer-nx-bus is 75m.

4.4.3.2 Nx-interface panel mounting

The nx-interface can be integrated in a panel. The maximum thickness of the panel cannot exceed 4mm.

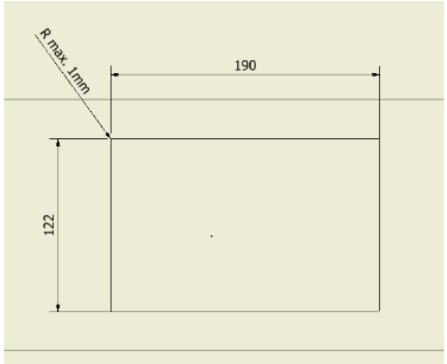

The opening cut in the front panel must be 122 x 190mm with a maximum radius of 1mm in the corners

Mounting Instructions:

Insert the device from the front into the cut-out of the panel and push it carefully until it is fully inserted.
Insert the mounting elements (1) into the provided lateral T cut-outs (2) and push them sideways (3) so that they are locked.
For the first mounting elements in a corner, tighten the fixing screw (4)until it presses on the plate. Tighten the fastening screws to a maximum torque of 0.2 Nm.

Repeat procedure 3 for opposite mounting elements.
Repeat procedure 3 for remaining mounting elements.

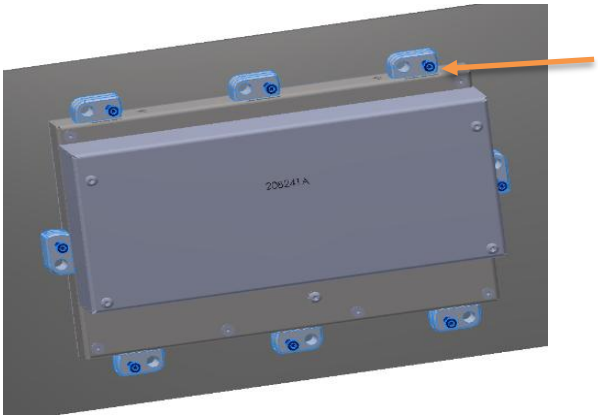

Mounting elements and screw are provided

Observe the maximum tightening torque of the fastening screws of the mounting elements otherwise they may be damaged.

Tighten the fastening screws of the mounting elements to a maximum Torque of 0.2Nm.

5 WIRING

This chapter covers the wiring/cabling of the next3 installation before powering it !

5.1 GENERAL OVERVIEW

5.1.1 System block diagram

The general schematic diagram of the **next3 st** is given below. Letter **s** is for the solar and **t** for the transfer.

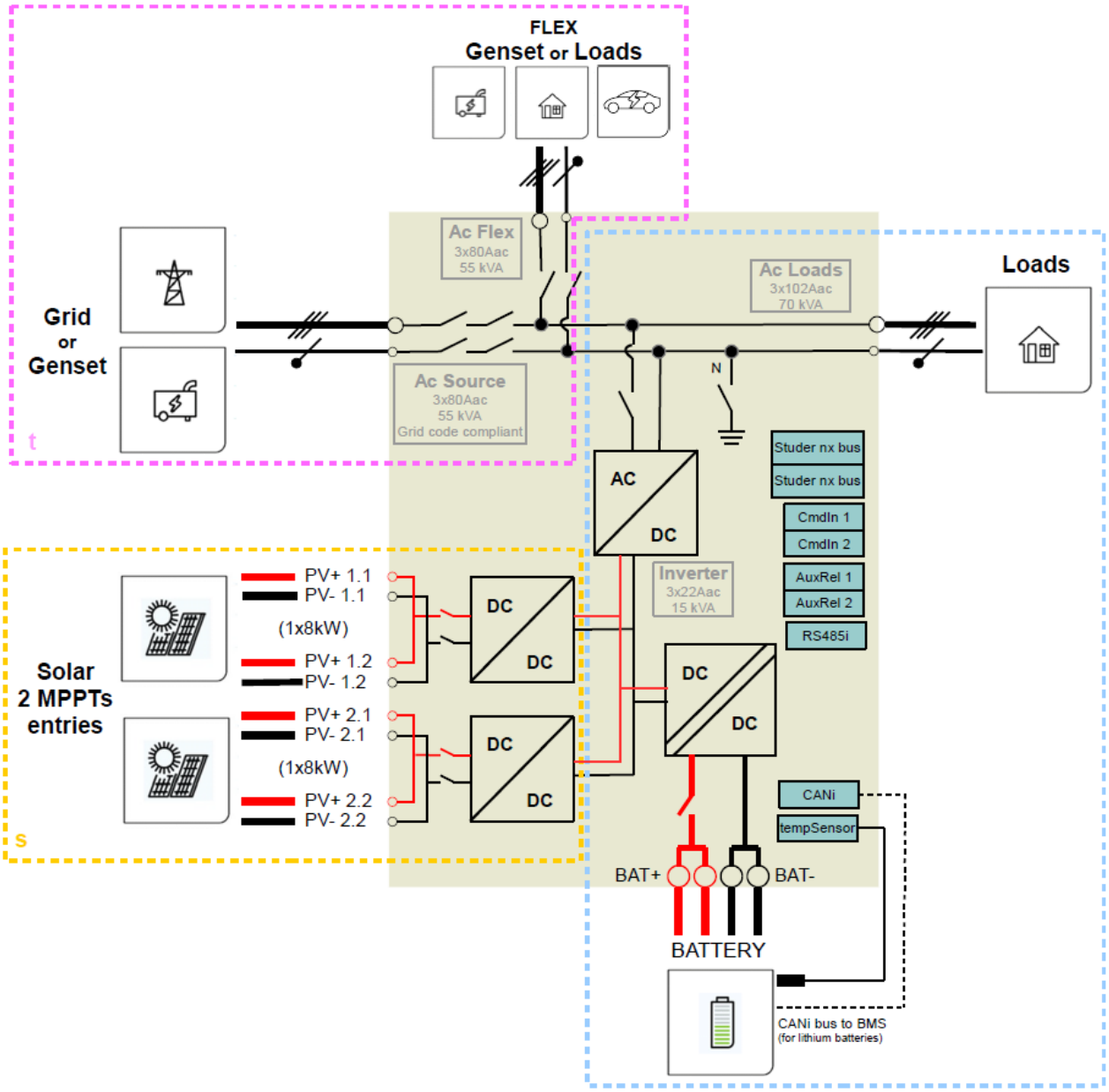

The Australian version has 2 specificities:

- The PV switch has been removed. An external PV -switch must be installed by the installer. This must be listed compliant with the Australian regulation.
- The command input 1 is used for the DRM0 function requested by the AS4777.2

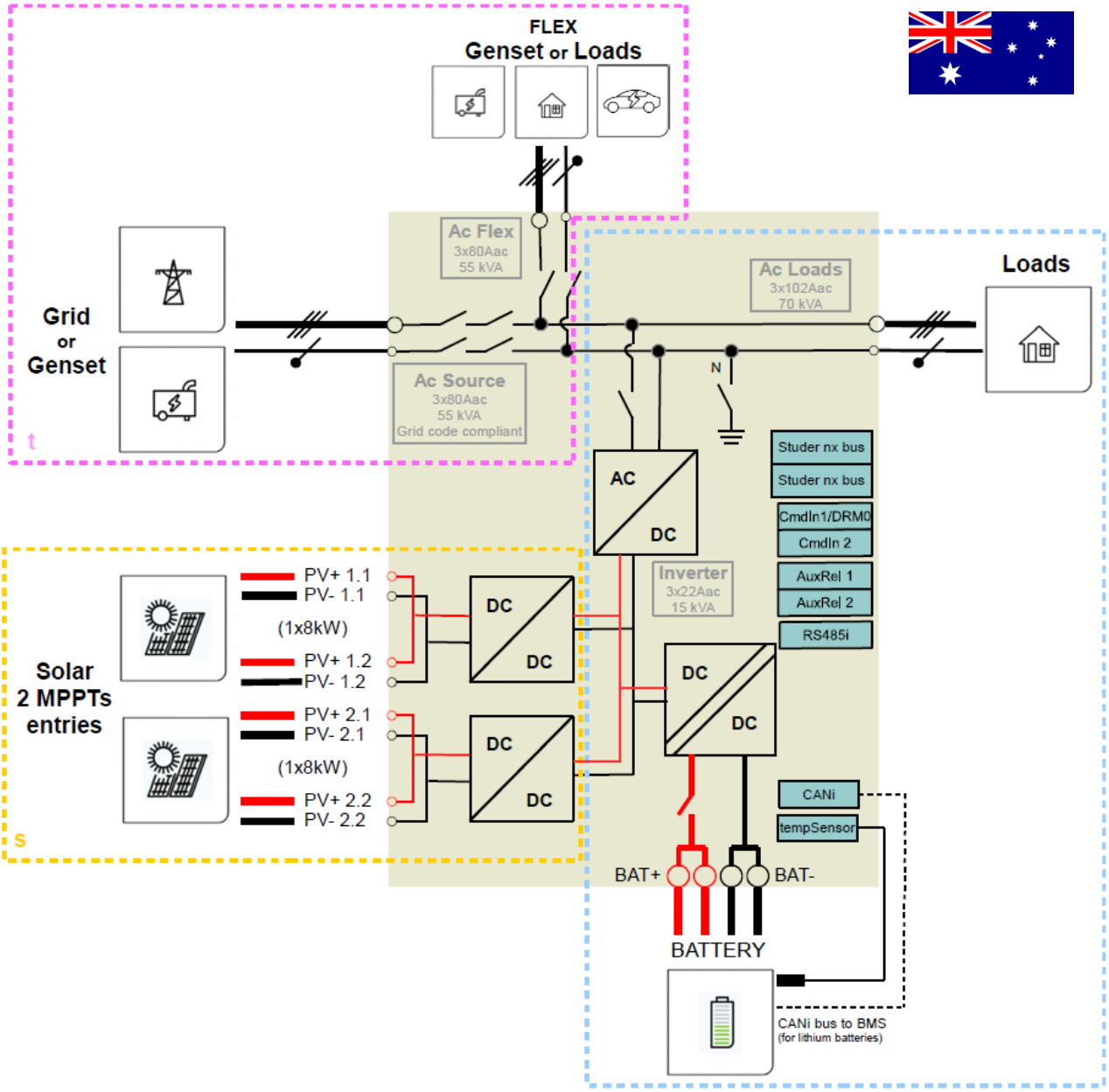

5.1.2 General recommendations

The connection of the next3 charger is an important step of the installation. The next3 is designed to be robust and is electronically protected against overloads, short-circuits, overheating, polarity reversal of the battery and polarity reversal of the PV.

Be aware of the following general guidelines:

- It may only be carried out by qualified professionals, aware of the rules and regulations in force. The installation must always comply with the local standards.
- The cross-sections of the cables connected to its terminals must comply with local regulations even if indications are given in following chapters.
- The installation materials such as cables, connectors, distribution boxes, fuses, etc. must be adapted and must be conform to the applicable laws and regulations, specially about fire hazards.
- All cables in use should be isolated with PVC, TFE, PTFE, FEP, neoprene or polyimide. The installed cables must withstand at least 70°C wire temperature. Make sure that connections are correctly tightened and that each wire is connected at the right place.

The next3 falls within protection class I. It has a PE connection terminal. It is mandatory that a protective earth is connected to the AC-Source and/or AC-Loads PE terminals. An additional protective earth is located at the bottom of the unit.

⚠	The connection compartment of the next3 must remain permanently closed while the device is operating. Before opening, check that <u>all</u> voltage sources (AC, battery and PV) have been disconnected or switched off and wait for at least 2 minutes before opening the equipment. It is imperative to close the protection cover on the connection terminals after each servicing. Before connecting or disconnecting the entry or exit cables AC-Source, AC-Loads and AC-Flex, the installer must be sure that there is no voltage present in the cables OR on the terminals.

5.1.3 Connections overview

Connections:

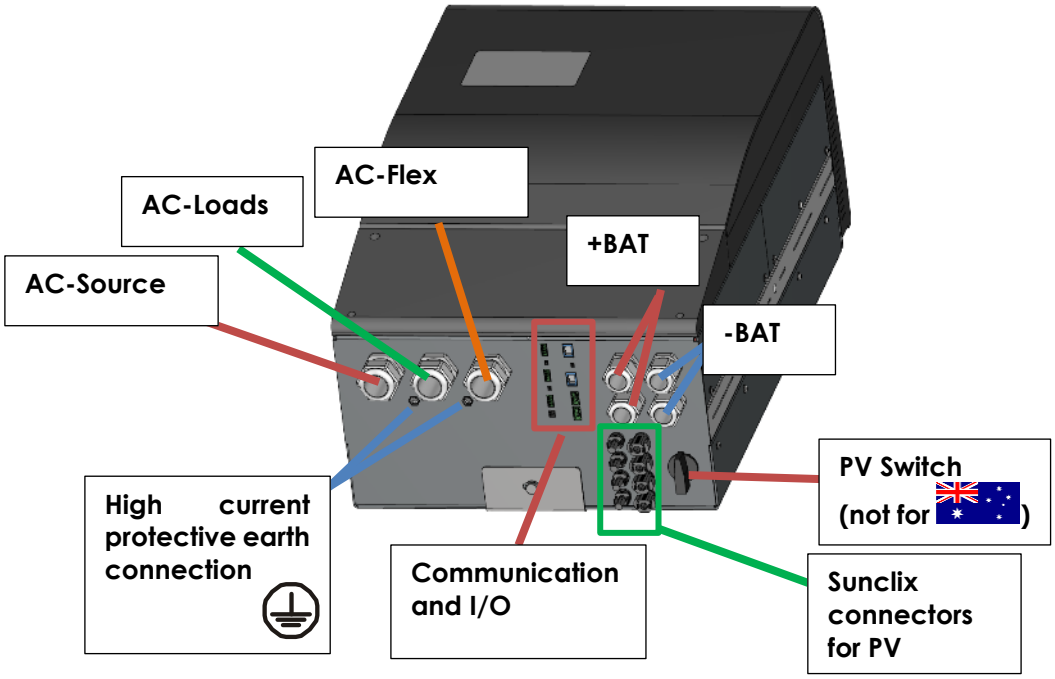

⚠	Any unused cable entry on the device must be sealed to prevent any intrusion. Intrusion of small animals in the unit may cause serious damages not covered by the warranty.

Open the connection compartment by removing front cover:

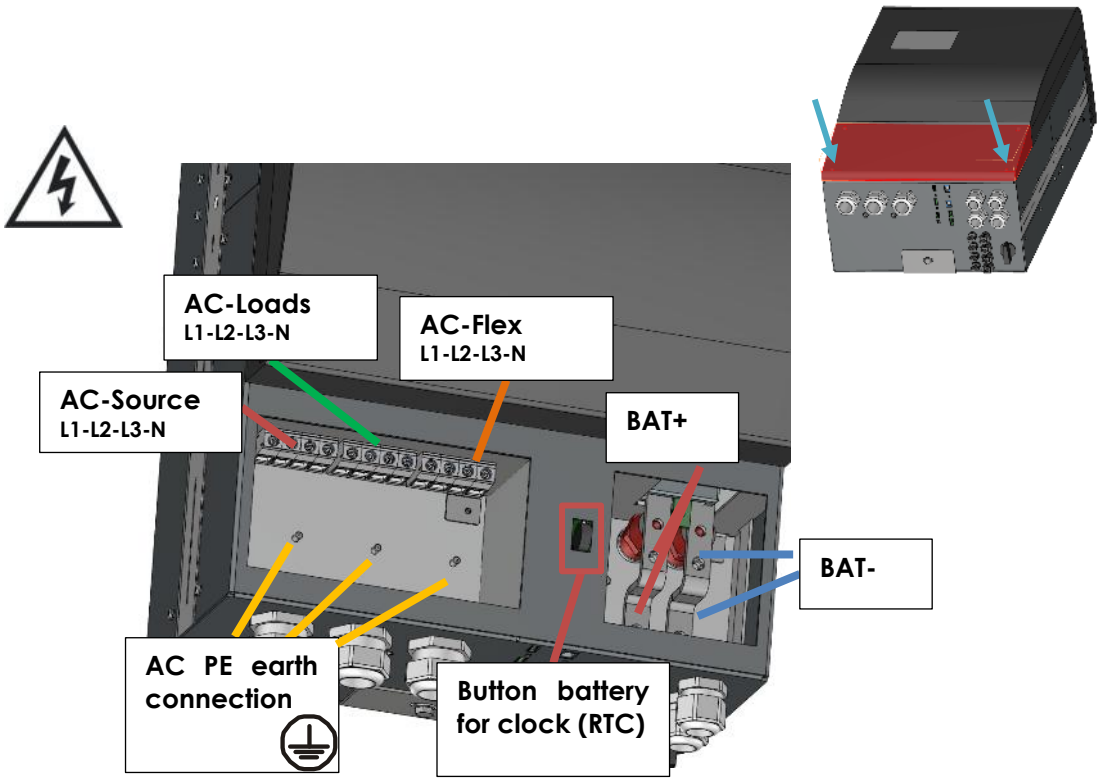

Denomination	Description	Comment
⏚	Protective earth connection terminal	This terminal is used as primary earth connection protection.
+BAT	Positive pole battery connection terminals	Carefully read sect. 6.3 Take care with the polarity of the battery.
-BAT	Negative battery pole connection terminals	
AC-Source	Connection terminals for the AC power supply (grid or generator)	See sect. 6.2 for cabling and 9.7 for settings. Note: It is imperative that the PE terminal is connected.
AC-Loads	Connection terminals for the device output.	See sect. 6.2 for cabling and 9.8 for settings. Note: It is imperative that the PE terminal is connected.
AC-Flex	Connection terminals which is configurable as second device output (loads) or as second AC source (for a second genset or grid).	See sect. 6.2 for cabling and 9.9 for settings. The main choice between AC-Flex being a source or loads cannot be modified when the unit is running. Note: It is imperative that the PE terminal is connected.
PV Switch	Connection/Disconnection of all PV arrays (positive and negative poles).	There is no PV Switch for the Australian model. A certified PV switch must be installed independently of the next3.
PV+ / PV-	Sunclix PV connectors	
Button battery for RTC	3.3 V (CR-2032) lithium-ion type battery socket	Used as a permanent supply for the internal clock to keep time when the next3 is not connected to a battery.

Communication and I/O connections:

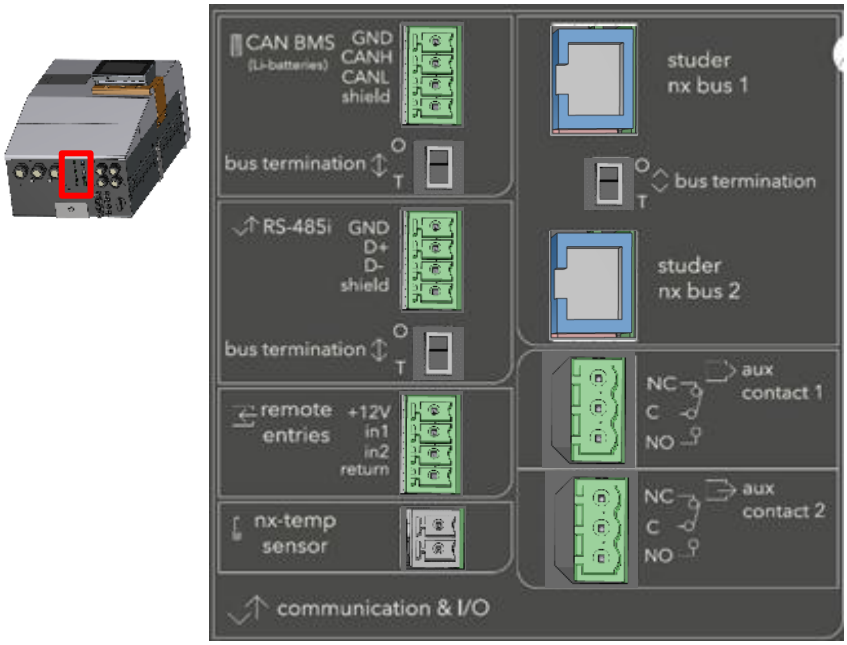

See corresponding chapter for detailed wiring and protocol in use.

Pos.	Denomination	Description	Comment
	nx-tempSensor	Connector for the battery temperature sensor.	Only connect the original Studer nx-tempSensor.
	Studer nx-bus	Two connectors for internal communication between studer next3 devices such as the nx-interface or other next3 compatible units	Only nx-bus compatible device can be connected. The connection of any other device (LAN routers, can-to-can interfaces, etc.) may damage the device. See chapter 4.6. The nx-bus is not compatible with other communication bus from Studer (for example Xtender bus).
	Termination switch O / T (Open / Terminated)	Switch for terminating the communication bus.	Set position (open) if the 2 connectors (3) are occupied. Set position T if only one is occupied. The connectors at the two ends of the communication bus daisy chain must be terminated.
	AUX1 and AUX2 CONTACT	Programmable dry contacts. 16A/230V	Take care not to exceed the admissible loads. C: Common NC: Normally Closed NO: Normally Open
	CAN BMS	Isolated CAN bus for communicating BMS of lithium batteries	Only for CAN BMS!
	Remote entries	Two digital inputs to indicate external changes to the unit.	See schematics in the "*Wiring auxiliaries I/O*" chapter. The DRM function is implemented on the entry 1
	RS-485i	Modbus connection for accessories	For the communication to the vario solar chargers and powermeter.

5.1.4 Tightening torques

The tightening torque of different connection points should be checked regularly, especially in installations exposed to strong vibrations (mobile systems, vehicles, boats, …). The table below states the recommended tightening torques for each connection:

Connection	Torque
AC connector • AC-Source • AC-Loads • AC-Flex	4Nm
Earthing PE connection	4Nm
Battery DC screws	10 Nm
Fixing belt	4Nm
Plastic cover	1Nm
PV connection	Sunclix connectors provided
Panel mounting accessories on nx-interface	0.2Nm

An annual check of all the connection tightness is recommended.
In mobile installations, the connection tightness should be checked more often.

5.1.5 Max permissible cable cross-sections summary

The maximum permissible cable cross-section for each connection is defined by the size of the corresponding cable gland, which is indicated in the below table:

	NX3
Max Section AC [mm2] / Cable gland	5x25 / M40
Max -Min Section DC [mm2] / Cable gland	2x 95 - 2x 70 / M32
Max section auxiliary relay, digital input, CAN and RS485 [mm2]	2,5
Max PV cable [mm2] for Sunclix	6

5.2 CONNECTING THE BATTERY

The next3 is a device which DC (battery) connection is to be connected exclusively to a 48V battery. This batterie connection is in overvoltage category 1 (OVC I). The max charging current to the battery is 300A. The maximal discharging current is the same as for charging 300A for standard controlled discharging when grid is connected. The max discharging current in offgrid is given by the load connected and depends on the surge power available, it is up to 24000kW/50V=480A for the short term surge power of 5seconds.

Due to high power of the next3, the battery cables are separated in two entries in parallel to have a more convenient handling. The recommended battery cable size is 70mm2 for a total of 140mm2 with two cables in parallel. The maximal size is 95mm2 for a total of 190mm2 section.

Battery cables must also be as short as possible, and the cross-section must conform with the applicable regulations and standards. Sufficiently tighten the clamps on the "battery" inputs.

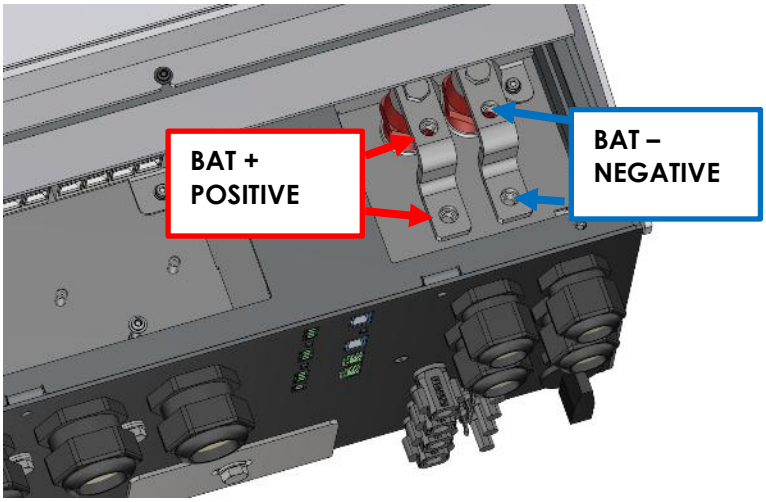

⚠	Battery cables must always be protected by one of the following measures: Have a protection and disconnection device (fuse, circuit breaker) on each pole or only on the pole not connected to earth. The protection device must be rated according to the cable cross-section but must not exceed 1.25 x next3 maximum current. It will be mounted as close as possible to the battery. The maximum current in discharge in offgrid with P30 is given with 16000/48=333Adc with factor: 333x1.25=416Adc without considering surge power.

Each next3 is connected directly to the battery through its own protective device (fuse or circuit breaker) and disconnection device. It should never be connected to the output of a DC voltage regulator like solar regulator, without having the battery as a buffer.

All other consumers or sources are connected directly to the battery by their own protective and disconnection devices.

5.2.1 Dimensioning the battery

The battery bank is dimensioned depending on the user's daily energy consumption and the number of days of autonomy required. It is sized also in function of the wanted daily Depth Of Discharge (DOD).
The dimensioning of the battery must also consider the power and the type of loads that are connected to the inverter. As rule of thumb, the maximum power of a lead acid battery is given with the capacity divided by five (C/5), in that case if all the power of the next3 is wanted (16kW), the capacity of the battery should be at least16000*5/48=1666 Ah.
For lithium, see the maximum power defined by the manufacturer as lithium batteries are generally rated with a much higher current (C/3 or even 1C).
Take into account the surge power of loads, for example for motor starting and the overload capacity of the inverter to dimension your battery system.

5.2.1.1 Battery bank design

Lead batteries are usually available in 2Vdc, 6Vdc or 12Vdc blocks. To get the correct operating voltage for the next3 (exclusively 48Vdc), several batteries must be connected in series. The capacity of the batteries can be increased using a parallel connection of several battery strings.

The various cabling options for the battery are presented in figures below:

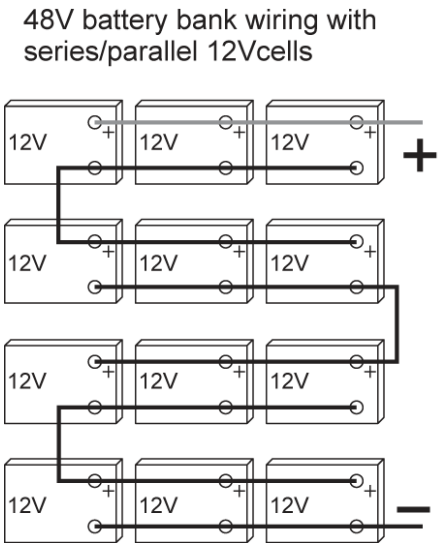

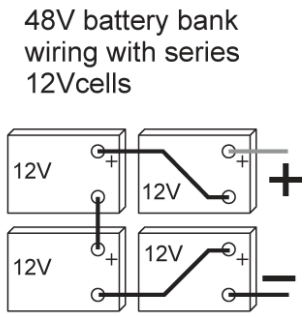

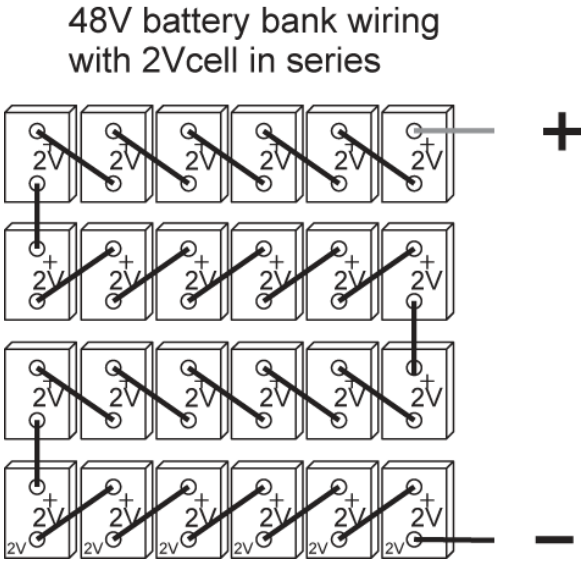

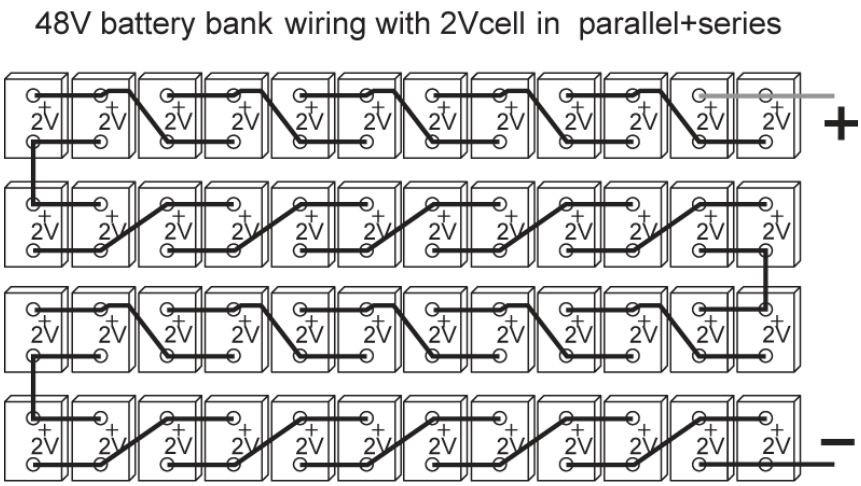

⚠	Strictly conform to the manufacturer's instructions for parallel connections, especially with lithium batteries.

5.2.2 Battery cable cross-section, DC protective and disconnection devices

The battery cables must also be as short as possible. Recommended section for the nx3 battery cables is 2x70mm^2 and a 400Adc protection for standard use. The recommended cable cross-sections are valid for lengths less than 3 m. Beyond this length, it is strongly recommended to oversize the battery cables (possible up to 2x95mm^2 for cables connected to next3 battery poles) and consider the voltage drop in the cables. The maximal battery cable length allowed is 10m.

For safety reasons, we recommend an annual check on the tightening and corrosion of all connections. In mobile installations, the tightening of the connections should be checked even more frequently. For lead acid batteries, an individual measurement of each cell is recommended. Any divergent values can be a sign of problem.

To avoid any further loss and protection redundancy, the next3 does not have an internal fuse.

⚠	The battery cables must be protected by one of the following measures: - protection device (fuse) and disconnection device at each pole - protection device (fuse) and disconnection device on the pole not connected to the earth In all cases check local regulation and normative.

5.2.3 Connecting the battery

Start the connection on the next3 side first, without any voltage. Keep battery poles away/ protected to prevent any unwanted contact with conducting parts.

5.2.3.1 next3 side connection

Insert the cable glands supplied on the battery cable before tightening the cable lugs. Crimp the cable lugs and fasten the cable gland on the device. Repeat this for all battery cables. Fix the battery cables to the appropriate connections "+ Battery" and "- Battery". The M8 screws must be very well tightened (10Nm).

5.2.3.2 battery-side connection

Prepare the batteries for connection: appropriate battery clamps, protection device, cables in good conditions with correctly fitted clamps.

Fasten the negative cable on to the negative pole (-) of the battery and the positive cable on the open protection device.
The cable lugs must be carefully fixed and tightened sufficiently to guarantee minimum loss. Insufficient tightening may cause dangerous heating at the connection point.

⚠	During the first start of the unit, it is necessary to check that the parameter values of the next3 are consistent with the recommendations of the battery manufacturer. Non-conforming values may be dangerous and/or seriously damage the batteries. See the chapter about programming and set the proper values at initial commissioning (with wizard on nx-interface).

5.2.4 Earthing of battery

One of the two battery conductors can be earthed. This may be either the positive or the negative pole as the battery is isolated from the other potentials (PV, AC). In all cases, the installation must be in conformity with the local regulations and usage or specific standards associated with the application.

In case of earthing, the earthing conductor cross-section must at least be equivalent to the cross-section of the battery conductor. The earthing of the equipment must also adhere to these regulations. For this case, use the additional earthing screws, which are located at the bottom of the device under the AC cabling glands.

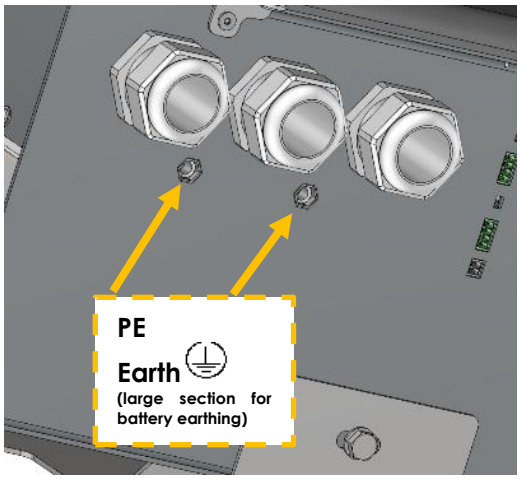

All the other earthing systems (earthing by means of a protection device, impedance, without earthing or earthed at battery positive pole) require the whole battery circuit to be protected against electric shocks.
Any accidental contact with the conductive parts of the battery circuit is to be avoided by providing a Class II protection level.

5.2.5 Precautions when using batteries

The batteries should only be chosen, dimensioned, and installed by qualified personnel. Lead-acid batteries with liquid or gelled electrolyte produce a highly explosive gas during normal use. Other special types of batteries present similar risks. Avoid source of sparks or fire in the immediate vicinity of the batteries. The batteries must be kept in a well-ventilated place and installed to avoid accidental short-circuits when connecting.
Never try to charge frozen batteries. When working with batteries, a second person is required to give assistance in case of problems.
Fresh water and soap must be kept close at hand to allow adequate and immediate washing of the skin or eyes affected by accidental contact with the battery acid. In the event of accidental contact of the eyes with acid, they must be washed carefully with cold water for 15 minutes. Then immediately consult a doctor.
Care is required when working close to the batteries with metal tools. Tools such as screwdrivers, open-ended spanners, etc., may cause short circuits. Sparks created by short-circuits may cause the battery to explode. Therefore, these kinds of tools must always have isolated handles and never be placed on top of a battery. When working with the batteries, all metal jewellery such as rings, watches with a metal bracelet, earrings, etc., must be taken off. The current supplied by the batteries during a short circuit is sufficiently powerful to melt the metal and cause severe burns.
Batteries at the end of their life cycle should be recycled in accordance with directives from the responsible local authorities or the battery supplier. The batteries should never be thrown into fire as they may explode. Under no circumstances should you try to take apart or dismount the battery, as they contain toxic and polluting materials. For ungrounded battery systems, always check that they are not inadvertently grounded before starting to work on the batteries.
Always carefully follow the instructions of the battery manufacturer.

⚠	A battery voltage higher than 80V can cause important damage or destroy the equipment.

5.2.6 Battery temperature sensor connection (nx-tempSensor)

The operating voltages for lead batteries vary depending on the temperature. A temperature sensor is available to correct the battery voltage and guarantee an optimum charge in function of battery temperature.

The temperature range of the sensor is from -25°C to 70°C. The default temperature compensation for lead acid batteries when a sensor is plugged is -3mV/°C/cell compared to 25°C. For a 48V battery this is 72mV/°C. See the configuration section of this manual for modification of the temperature coefficients. A warning is raised at 40°C and error is raised at 55°C; those thresholds can be modified.

The temperature sensor nx-tempSensor is supplied with a 10m cable and the proper male connector beside. The connection has no polarity and can be done in one or the other direction without preference. The sensor should be placed as close as possible of the battery

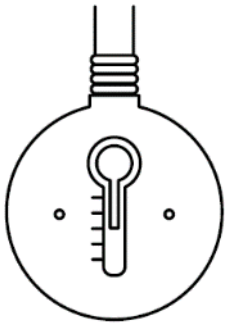

The temperature sensor is automatically recognised, and the correction of the voltage thresholds applied immediately in case of non-communicating battery. If a communicating battery is used the temperature measures by this sensor is not taken into account as the temperature is directly given by the BMS. The nx-tempSensor temperature is recorded in the datalog.

5.2.7 Battery with communicating BMS: CAN connection

The next3 uses a CAN Bus to communicate with the BMS (Battery Monitoring System) of a lithium battery. Lithium batteries are more complex to handle compared to lead acid batteries. A BMS is responsible of cell monitoring and battery safety. The BMS knows the status of each cell, and it computes maximum charging/discharging currents and maximum/minimum target voltages. These values must be respected when the installation is working and BMS communicates to inverter/chargers the proper setpoints for proper operation.
The next3 has several CAN protocols implemented for communication with different battery management systems.
These protocols are compatible with specific batteries. **See the Studer-Innotec website for the up-to-date list of compatible batteries, brand and models**: https://technext3.studer-innotec.com

Updates the next3 software to have the latest communication protocol.

Beware of the pinning order (CANH, CANL, GND) on the connector, see instruction of the BMS manufacturer carefully. An appendix about various lithium batteries is available.

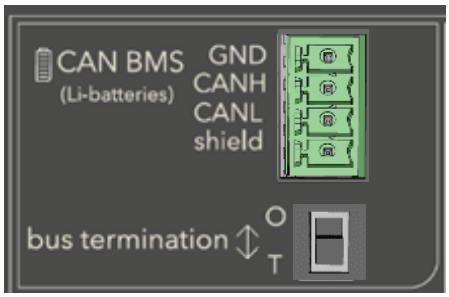

For a point-to-point connection, the bus termination should be set to T (Terminated). If the device is in the middle of a daisy chain, the termination is set to O (Open).
Generally, the next3 is connected point to point to the BMS and the termination should be on T.

Most of batteries BMS have a specific connector for CAN connection and a specific pinning for the wiring. There is no standard.
Even with a RJ45 connector, the pinning may vary.
The cable must be adapted by the installer case to case, respecting the signals (GND, CAN-H, CAN-L).

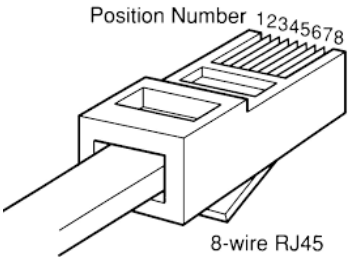

As example here is the pinning for the CIA-303-1 :

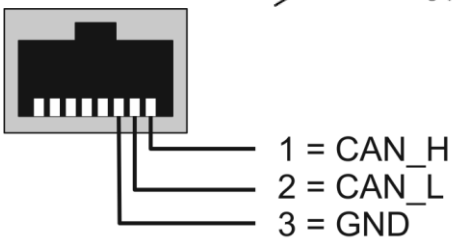

That must be wired/screwed with the provided connector:

Configuration with compatible batteries :

Autarctech - LiRack/ LiTerminal **BMS Orion** – Jr (www.orionbms.com) **BMZ** - ESS 3.0 – ESS 9.0 – X **BSLBATT** – LFP battery **BYD** - Premium LVL/ LVS, B-Box Pro 2.5–10.0, B-Box Pro13.8 **Cegasa** – eBick Ultra 175 ES **Leclanché** - Appollion Cube, TiBox **LG Chem** - RESU series* **Midac** - RES 4.2/5.1 **Pylontech** - UP2500, US2000, US3000, Phantom-S **REC -** Q BMS 16S **Solar MD** - SS4074/SS4037/ SS202 **Systems Sunlight** - Li.ON ESS **Tesvolt** - TS 25-50 **Vision Mechatronics** - LiRack, Lirack Eco **Fortress Power** – eFlex 5.4 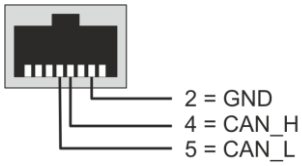	**Archimede Energia** - FXO-048-XXX-TCX **Cegasa** - eBick Pro 180 **Commeo** - 48 V system **Cosun** - RS-Box **Solarni Panely** - HomeGrid BMS **Super-B** - 12V SB12V160E-ZC and SB12V100-ZC **Weco** - 4K4 LFP/ 5K3R20 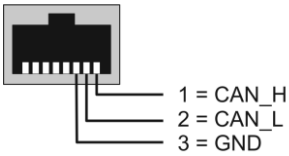	**PowerTech** - systems PowerRack 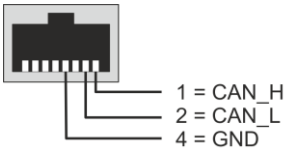

BlueNova - BN 13-26-52 series **Freedom Won** - Lite Range **Pallas** - RESS 48V50 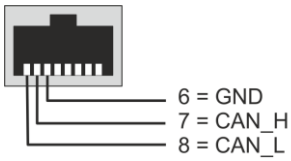	**Cegasa** - eBick Ultra 100 **Discover** - AES 44-24-2800 and 42-48-6650, LITHIUM PRO 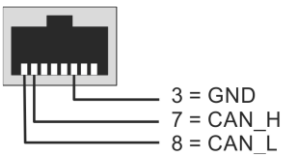	**Soltaro** - SOL-R16-2.5KWH and SOL-R16-5.0KWH 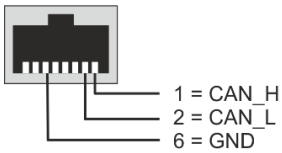

Zruipower *- Power Base Pro* 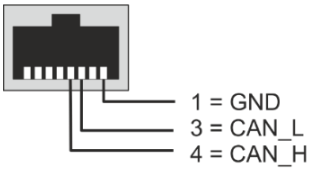 	***IPS*** *(Integrated Power Solution) liCube modular LiFePO4-System* 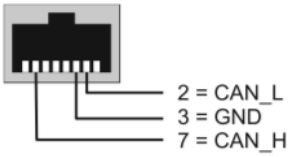 	***GS-HUB*** *– Home Hub* 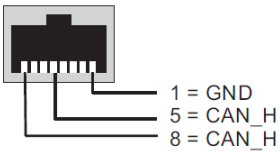
DLG *– ESS48-2U-L* 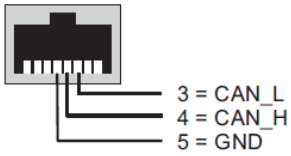 	***Zruipower*** *- ZR-FC48100-1630J1, ZR-FC4850-1630J1* 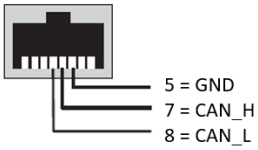 	***UZ Battery*** – Power Lite L051100-A1, L051100-B, L051100-D 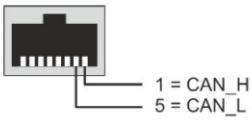

The next3 is supplied without batteries, please, refer to the manufacturer for warranty conditions and availability.

5.3 Connecting the AC (Alternative Current)

⚠	Dangerous AC may be present on the connection terminals. Make sure that the inverter is deactivated and that there is no AC or DC voltage present on the AC terminals before proceeding with the connection. The AC connection is in overvoltage category 3 (OVC III).

On the next3 model, remove the cover plate by unscrewing the two screws to access the AC terminals and protective earth. The connections inside are shown on the figure below:

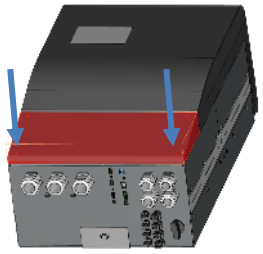

There are 3 AC connections:

- **AC-Source**: connection for the main AC source. A grid or a generator. This input has double security relays for disconnection according to safety and grid code requirements like VDE-0126 and others. In case of grid connection, always connect the grid to AC-Source.
  In offgrid, a single-phase source may be used and connected to the L1 of the AC-source. For example, for a single phase genset as a backup. To fulfill voltage fluctuations and flicker limits requirement, the maximum permissible impedance of the wiring must be lower than 0.15Ω + j0.15Ω for each phase and 0.1Ω + j0.1Ω for the neutral.
- **AC-Loads**: connection for the loads, that are supplied by the inverter. The 230 V and 400V consumers must be connected on the "AC-Loads" connection terminals with the wire cross-section conforming to the standards regarding the rated current at the next3 output.
- **AC-Flex**: this is a configurable connection to be connected to loads or to a genset. The choice of configuration is done at the setup of the system during the Wizard procedure. The AC-Flex configuration is fixed and cannot be changed anymore in operation for security reasons.

On models without transfer (nx3-16000-48 and -s) there is no AC-Source and no AC-Flex connections.

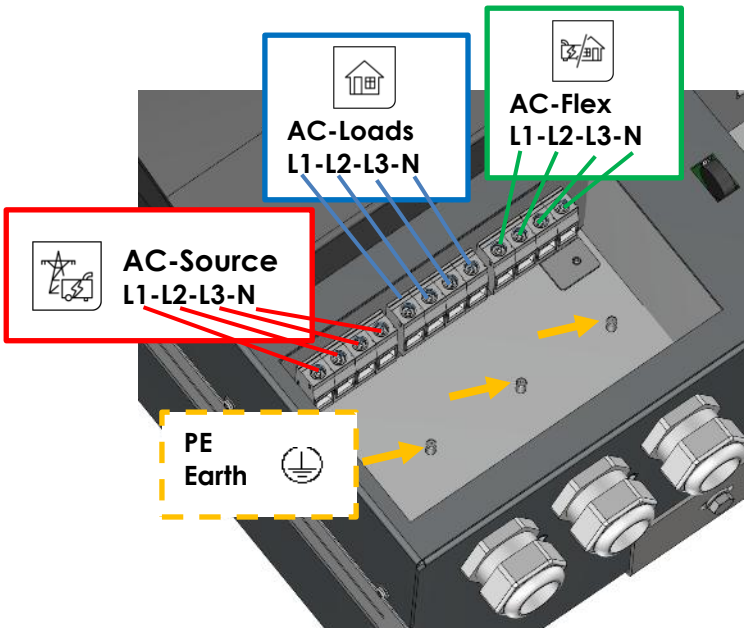

Refer to the general schematics (block diagram) at the beginning of this chapter for a better understanding.
The next3 terminals are marked in the following way:

N = neutral

L = lines (L1, L2, L3)
⏚ = protective earth (connected to the enclosure of the device).

Example of connection for AC loads

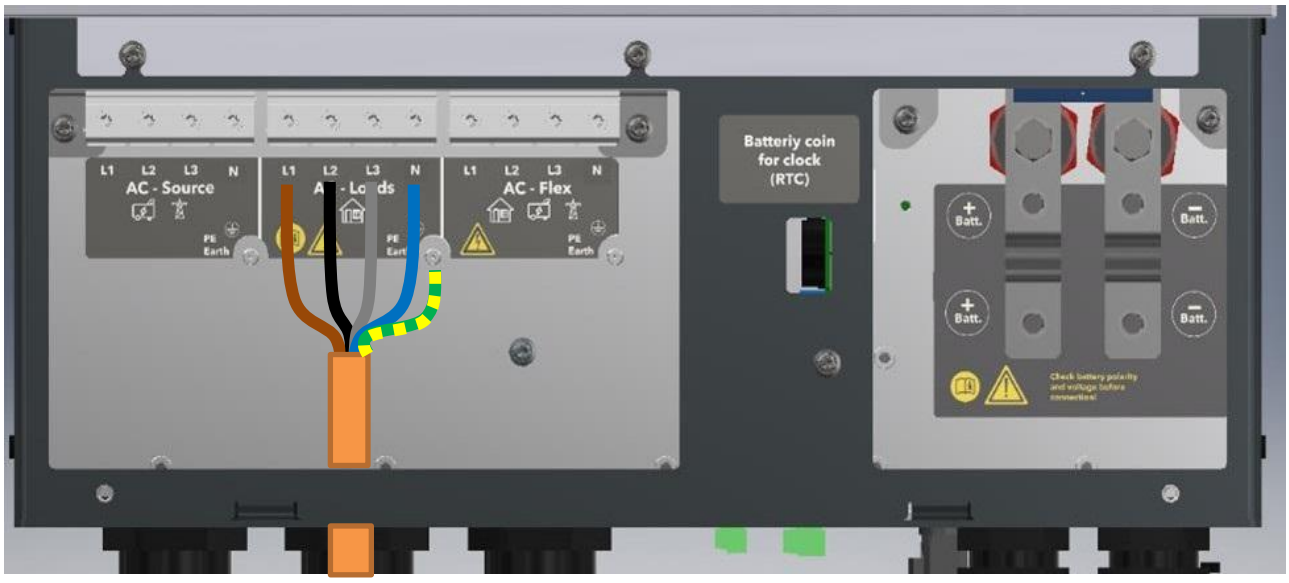

ℹ	Insulation tests: At commissioning of an electrical system, insulations tests are performed on the wiring (in some countries, depending on local regulation). It is performed applying high voltages on the cables and measuring the leakage current. This must be done <u>without</u> the next3 in the loop. Overvoltage surge protections included in the next3 will invalidate the tests. Insulation between circuits and the ground is tested in factory for every next3 unit manufactured according to the device IEC/EN 62109 and IEC/EN 62477 safety standards.

5.3.1 Sizing of AC protective devices

The source must be connected to the input terminals marked "AC-Source" with sufficient wire cross-section, depending on the power output of the source, and protected by a protection device of the appropriate rating. In any case it must be **maximum 80A per nx3**.

For people safety, we recommend using residual current devices (RCD) for loads at the output of the nx3. Take care of the earthing and neutral system for proper operation of the RCD. In any case, AC distribution must comply to the local standards and regulations, and generally, be realised through a distribution panel in an enclosure.

For cables protection, no downstream protective device is formally required if cross-sections of cable used for distribution satisfy to regulatory requirements for the largest rated output current listed on the nameplate of the next3. The next3 is protected against overload and short-circuit and will stop in those cases. When connected to a source, the upstream protection must stop short-circuits currents from the grid/genset.

When next3 connects to any AC source or AC Loads, there is never inrush current.

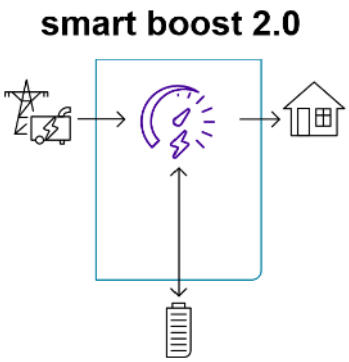

Due to the source assistance function (Smart-Boost), the current at the output of the device may be higher than the rated current of the inverter. It is the sum of the current supplied by the additional source and the current supplied by the inverter. In this case, the dimensioning of the output cables will be carried out by adding the current indicated on the protection device located on the upstream of the unit, to the nominal current of the inverter.

If circuit brakers (CB) are installed at the output, we recommend B curve devices. They will be sized at maximum to the highest value listed on the unit's nameplate or by the addition of the first value plus the value of the input protective device. (i.e. inverter current + input current). As example, if the AC Source current is 50Aac per phase and knowing that the current of the inverter is (16000/230/3)=23Aac per phase, the total current on the output would be 73Aac per phase.
In any case it must be chosen according to the cable size downstream.

If the source assistance function (Smart-Boost) is not used; the size of the protection device for the AC-loads output will be established at a maximum value equal to the rated current of the inverter, or at the maximum value of the protection device at the input if that one exceeds the rated current of the inverter.

If the AC-source is not used the protective device will be sized equal or smaller than the smaller value indicated on the nameplate.

The next3 is intended to be supplied by alternative voltage sources such as the grid or a generator. Check that the rated voltage of the source corresponds to the rated voltage of the next3 model specified on the nameplate on the side of the next3.

The conditional short-circuit (Icc) is 45Arms at the output (AC-Loads and AC-Flex if configured as secondary loads) of the next3 when next3 is in stand-alone mode. DDR is mandatory for circuit breaker at output (AC-Loads and AC-Flex if configured as secondary loads) of next3.

The maximum prospective short-circuit current Icp of the sources connected to next3 inputs (AC-Source and AC-Flex if configured as secondary source) is 15kArms.

The minimum prospective short-circuit current Icp of the sources connected to next3 inputs (AC-Source and AC-Flex if configured as secondary source) is 1,6kArms.

The rated short time withstand current Icw of the next3 inputs (AC-Source and AC-Flex if configured as secondary source) is 16kArms during 500ms.

The rated peak withstand current Ipk of the next3 inputs (AC-Source and AC-Flex if configured as secondary source) is 25kArms.

5.3.2 AC Neutral and Earthing system

The next3 is a unit with protection class I, which is intended for cabling in a grid type TT, TN-S or TNC-S. Its metal case must be earthed. The earthing of the neutral conductor is carried out at a sole installation point, upstream of the RCD circuit breaker (in domestic application, generally type A, 30 mAac).
The neutral insulation to the earth is checked by the device and errors will be raised by the next3 if the measurements don't correspond to the settings of the device.

The next3 case and/or the PE connector, depending on the local installation rules, must be connected to earth. The PE cross section must be as big as the cross section of the line or neutral conductor, but the minimum cross section must be at least 10mm^2.

⏚ = protective earth (connected to the enclosure of the equipment).

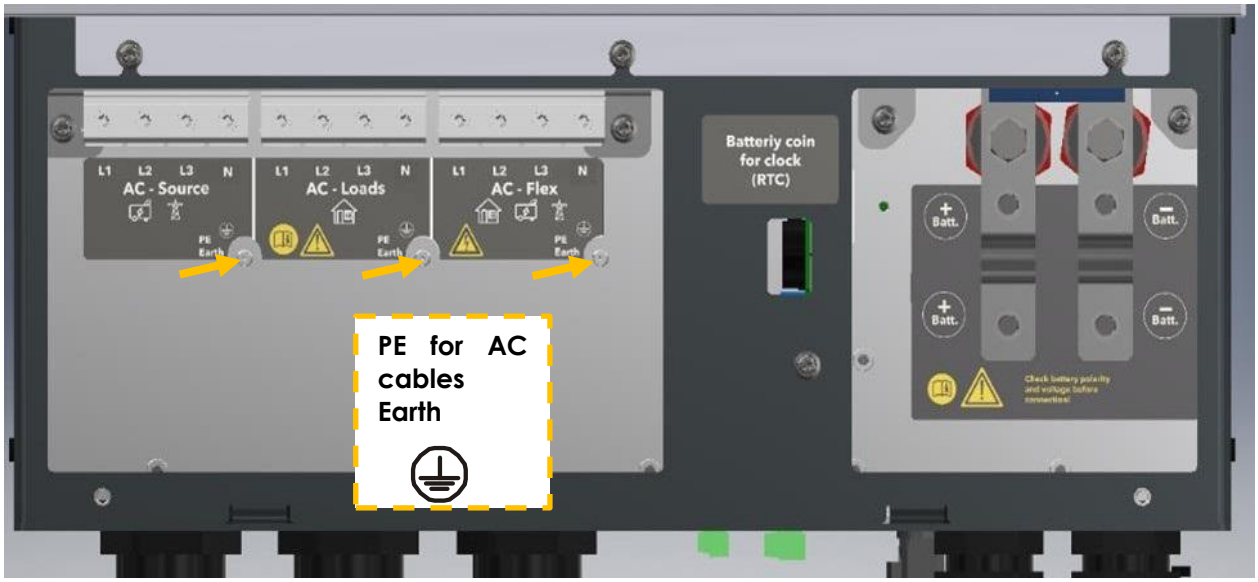

In any case, the protective earth must be connected in accordance with local standards and regulations in force. The protective earth of the equipment must be connected at least to the protective earths of all the Class I equipment after and before the next3 (equipotential connection). The information, notes, recommendations, and diagrams reported in this manual are examples and must in any case be adapted to local installation rules. The installer is responsible for the conformity of the installation with the local standards in force.

ℹ	An additional earthing terminal is present under the AC-cables glands at the bottom of the unit. It can be used instead of a connection on the input terminals of the device, particularly when cable cross-sections used at the output do not allow the use of a five-wire cable (lines L1 L2 L3, earth and neutral) through the conduit glands of the connection cables of the input and output (AC-SOURCE, AC-LOADS and AC-FLEX), or when the earthing of one of the poles of the battery. PE required using same or greater cross-sections than the battery cable when the battery is grounded.

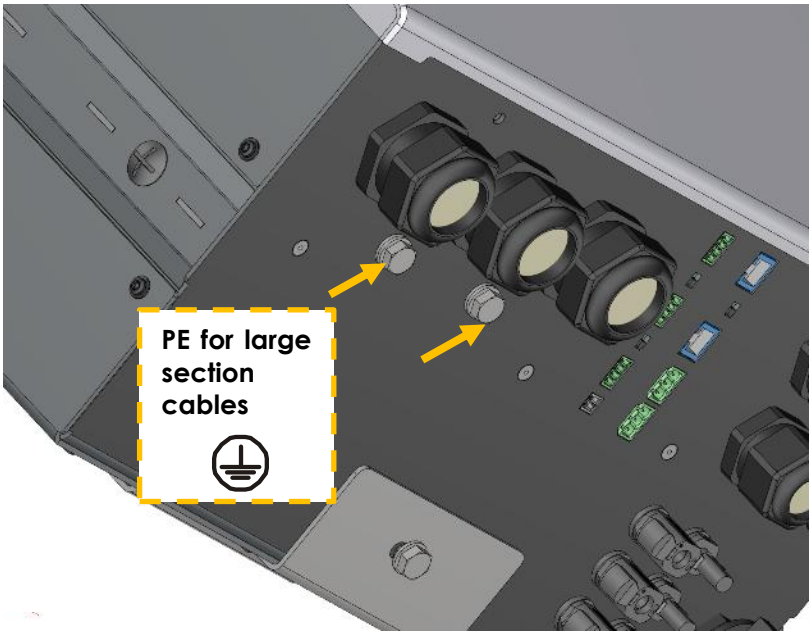

5.3.2.1 Stationary installation and earth neutral scheme

The next3 with transfer is equipped with a programmable earthing relay able to bond the Neutral wire (on Load side) to the earth (case of the device).
This relay can be configured in the following mode:

- **Offgrid self-managed** (default): With "Offgrid self-managed" selected the system will handle the connection and disconnection of the earthing relay depending on the inverter working mode: Offgrid or Ongrid. This mode can only be selected in a discontinuous neutral wiring configuration.
  Between each Ongrid-Offgrid transition a relay inspection is realized and the grounding path is validated to ensure system safety.
  Typical installations where "Offgrid self-managed" should be selected are:
  - Mobile installations.
  - Installations connected to grid/genset via a plug connector.
  - Standard stationary installations.

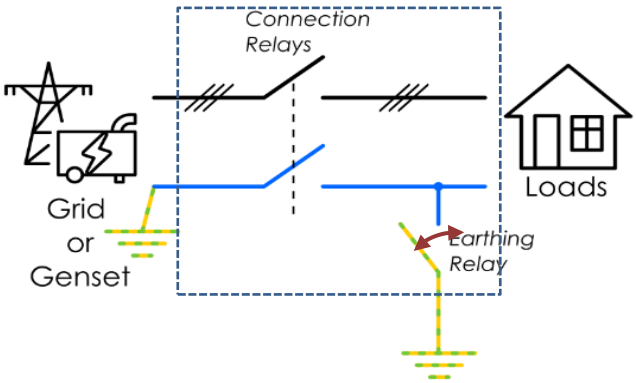

  With this mode a permanent check of the neutral voltage is performed. RCD breakers should be placed on the load side.

- **Solid neutral**: This configuration is used when continuous neutral is required. In this case the system will never close the earthing relay since the Neutral to earth bonding should exist downstream. Grounding path is monitored to ensure system safety. An error is raised if grounding is not correct or if neutral continuity is not correct.
  Typical installations where "Solid neutral" should be selected are stationary installations where

local rules specify explicitly continuous neutral wiring.

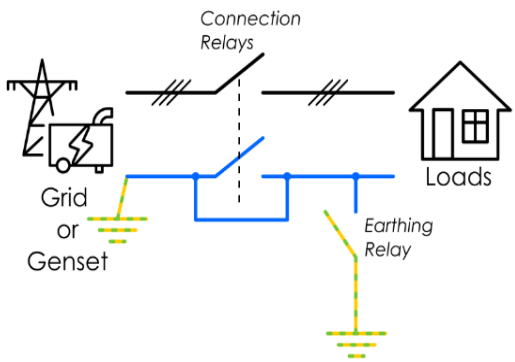

- **Disabled**: Disabled mode keeps earthing relay opened and no earthing path verification is realized. This mode should be used with precaution since user must ensure installation safety in any case.
  Typical installations where "Disabled" should be selected are installations with IT earthing system. In an IT network there is no grounding connection and safety isolation is ensured by an external impedance check device.

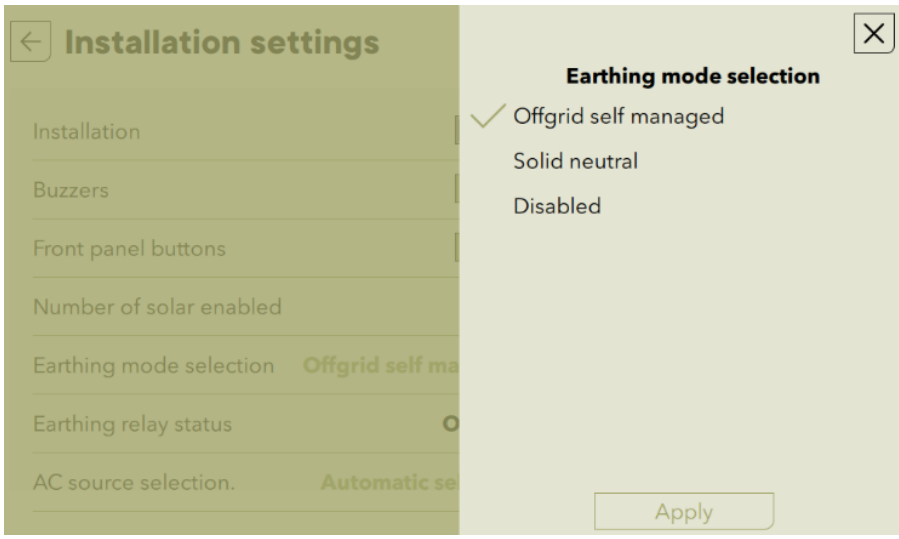

There is a check on the neutral-earth isolation in function of each case except for disabled.

The selection of the operating mode depends on the wiring configuration and the local standards.

It is also possible to carry out a connection of the neutrals to preserve an unchanged earthing system downstream, independent of the operating mode of the next3. This is called "Solid Neutral" mode. It may not be accepted for security reasons. Please check your local installation rules. This configuration is not recommended by Studer.

Example of solid neutral connection inside of the connexion box:

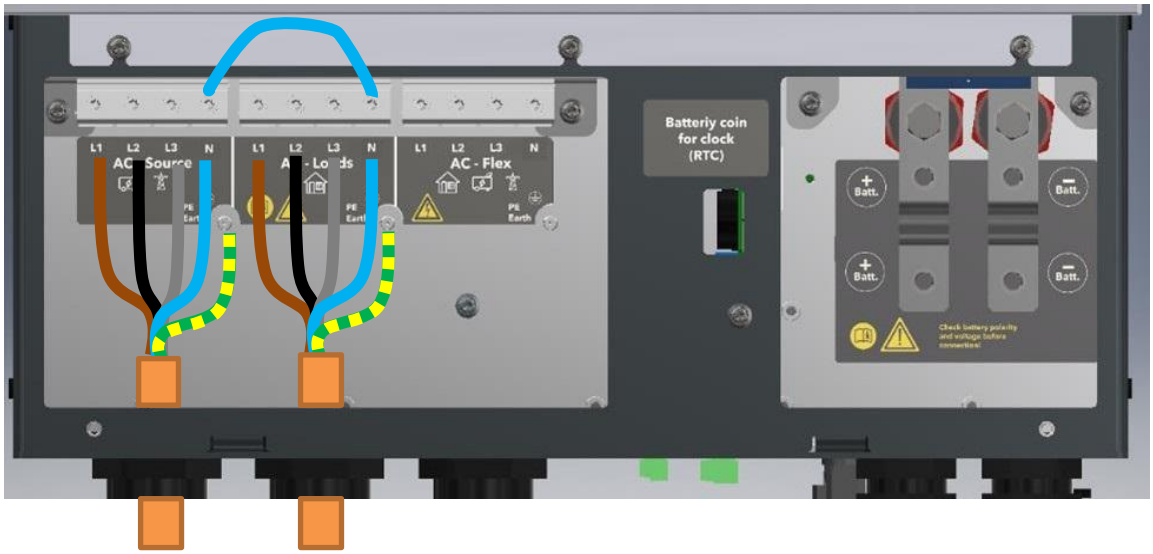

Safety is guaranteed by the equipotential bonding and by any RCD circuit breakers placed downstream.
This solid neutral connection is not permitted in a floating installation if a socket is installed upstream of the next3 (typically in mobile application).

It is not possible to mix the configuration of solid neutral and self-managed programming in the case of use of a grid and of a genset.

5.3.2.2 Mobile installation or installation connected to the grid via plug connector

When the input of the device is connected directly to the grid via a plug, the plug must remain accessible.

⚠	The connection (link) between the neutrals upstream and downstream of the next3 is not permitted in this configuration.

In the absence of voltage at the input, the neutral and live are interrupted, thereby guaranteeing complete isolation and protection of the cabling upstream of the next3.
The earthing system downstream of the next3 is determined by the upstream earthing system when the grid is present. In the absence of the grid, the earthing system downstream of the inverter is in isolated mode. An automatic connection with an internal relay can be programmed with settings.

This connection type guarantees the optimal continuity for supplying the next3 loads. The first isolation fault will not lead to an interruption in the supply.
If the installation requires the use of a permanent isolation controller this would have to be de-activated when the TT network is present at the next3 input.

⚠	All sockets and protection class I devices connected downstream of the next3 must be properly connected to the earth (earthed socket). The cabling rules above remain valid, including in installations, in all cases where the next3 input is connected to the grid via a plug connector.

5.3.2.3 Next system without transfer

On models without transfer (nx3-16000-48 and -s) there is no AC-Source and no AC-Flex connections. These models do not have programmable earthing relay either. Thus, user must guarantee complete isolation and protection of the system. In such installation it is recommended to bond directly the neutral to the earth at one point in the system.

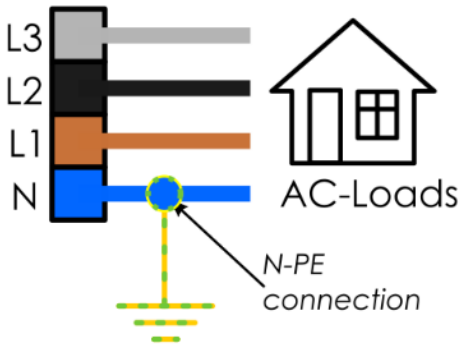

5.3.2.4 RCD breakers

For people safety, RCD breakers should always be installed. This requires a proper grounding of the neutral to work properly.
As the next3 can work in offgrid mode and interrupts the live and the neutral wires, the earth automatic connection to neutral (offgrid self-managed setting) should be used. The RCDs are placed after the next3 in the distribution box.

In case of a bypass use with both AC-Load and AC-flex bypass, there must be at least 2 RCD as the live wire are independent.

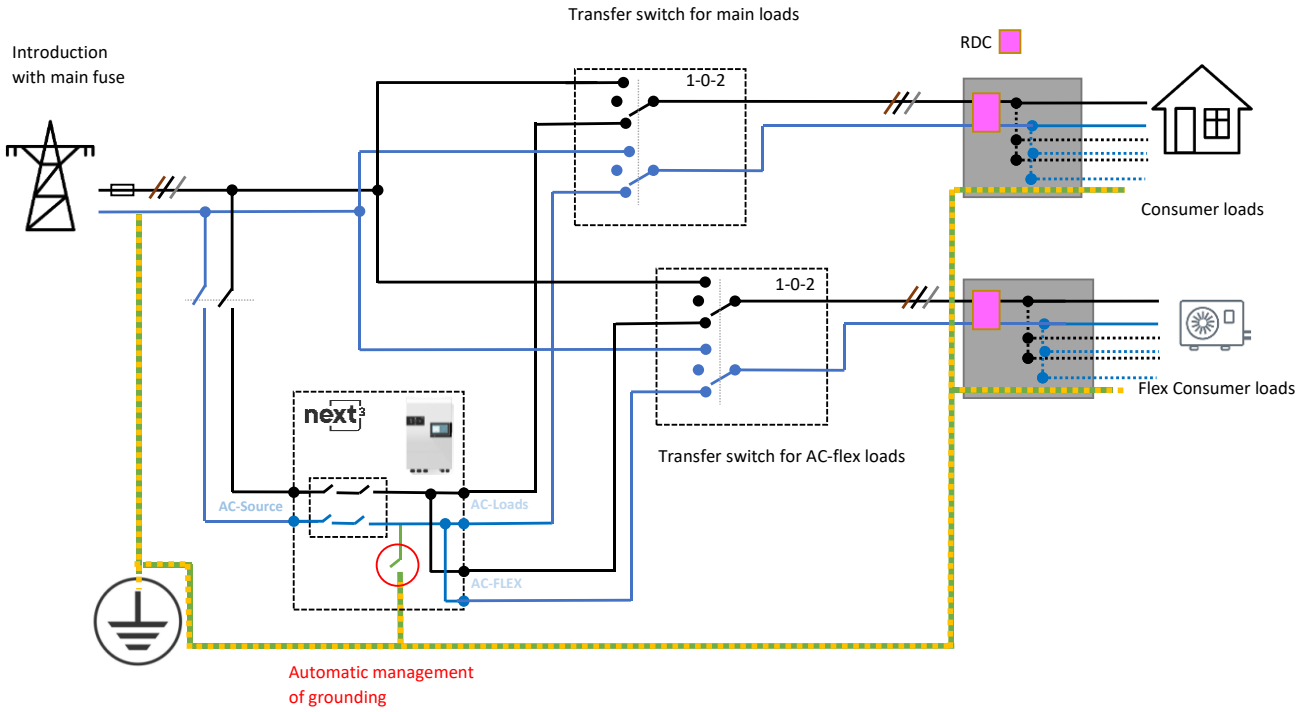

5.3.3 AC Commissioning

At commissioning various tests are performed by the electricians (according to the local rules).

5.3.3.1 Insulation tests

At commissioning of an electrical system, insulations tests are performed on the wiring (in some countries, depending on local regulation). It is performed applying high voltages on the cables and measuring the leakage current. This must be done without the next3 in the loop. Overvoltage surge protections included in the next3 will invalidate the tests.

The insulation between the circuits and ground is tested at the factory for each next3 unit manufactured in accordance with the safety standards IEC/EN 62109 and IEC/EN 62477, before the final installation of the surge protectors. The manufacturer Studer Innotec therefore guarantees the correct insulation of the unit to earth in this case. The installer must check the wiring without the presence of the next3.

5.3.3.2 Short circuit current and overload behaviour

In island operation (offgrid), when the inverter is not connected to the grid but operates on battery power, the output impedance of the next3 device is so that it cannot pass the standard short-circuit current tests carried out at the commissioning of an electrical installation.
Nevertheless, in case of a fault (short circuit, overload) the current is electronically limited by the device. When a short circuit occurs, it is detected, and the device stops automatically. Safety is ensured in this case. The short-circuit current of the next3 in island mode is 45Arms. In grid connected mode, the short-circuit current is given by the grid as inside of the next3 is just a contactor.

A next3 device detects a short circuit when the voltage falls below 50% of the rated voltage at maximum current limitation, the device will then shut down within 0.5 seconds. For a limited overload, when the voltage drops to less than 80% of the nominal voltage during a current limitation, then the device stops after 3 seconds. By default, the device tries to restart after 1 second for a maximum of 3 times. The number of attempts is reset to zero after 30 seconds of normal operation.
All these parameters can be set in "Expert" mode. Studer Innotec recommends leaving the default values.

5.4 CONNECTING THE PHOTOVOLTAIC GENERATOR

The next3 has an internal solar charge controller made of two independent MPPTs. Each MPPT can stand up to 8kW of photovoltaic (PV) power and has maximum operating PV input current of 20Adc.Each MPPT has 2 inputs and then up to 4 strings can be connected to the device. The two inputs of the top (MPPT1) are connected internally, as well as the two at the bottom (MPPT2). The rated current of the PV generator can be higher as the next3 limits with electronic control the maximum taken from the generator in any case. In any case the maximum short-circuit (Isc) current is 27Adc.

	The next3 solar inputs are intended to be connected exclusively to a source like a photovoltaic generator, excluding any other energy source.

	PV connection is in overvoltage category 2 (OVC II). The next3 is designed for PV generators supplying up to 900Vdc. This voltage is dangerous for human beings. During the installation or the maintenance of the system, it is mandatory to make sure that no dangerous voltage may surge in the system. The disconnection device must be open and secured against any accidental reclosing. When the photovoltaic array is exposed to light, it supplies a d.c. voltage to the next3. PV modules must have a Class A rating according to IEC 61730. The backfeed current to the PV is 0A, it is prevented by design of the electronic.

5.4.1 PV string dimensioning

The next3 accept input voltages between 200Vdc and 900Vdc max. It starts operating from 200Vdc (start-up in the morning) and will continue to operate even if the voltage decreases down to 100Vdc (shut down in the evening, partial shading, etc.). The 200Vdc are necessary to detect a proper ground insulation of the PV before starting the system.
The nominal power of each MPPT channel is 8kW. The maximum short circuit current is 27A and current in operation will be limited to 20 Adc. The maximum voltage allowed is 900Vdc. See below the PV input characteristics:

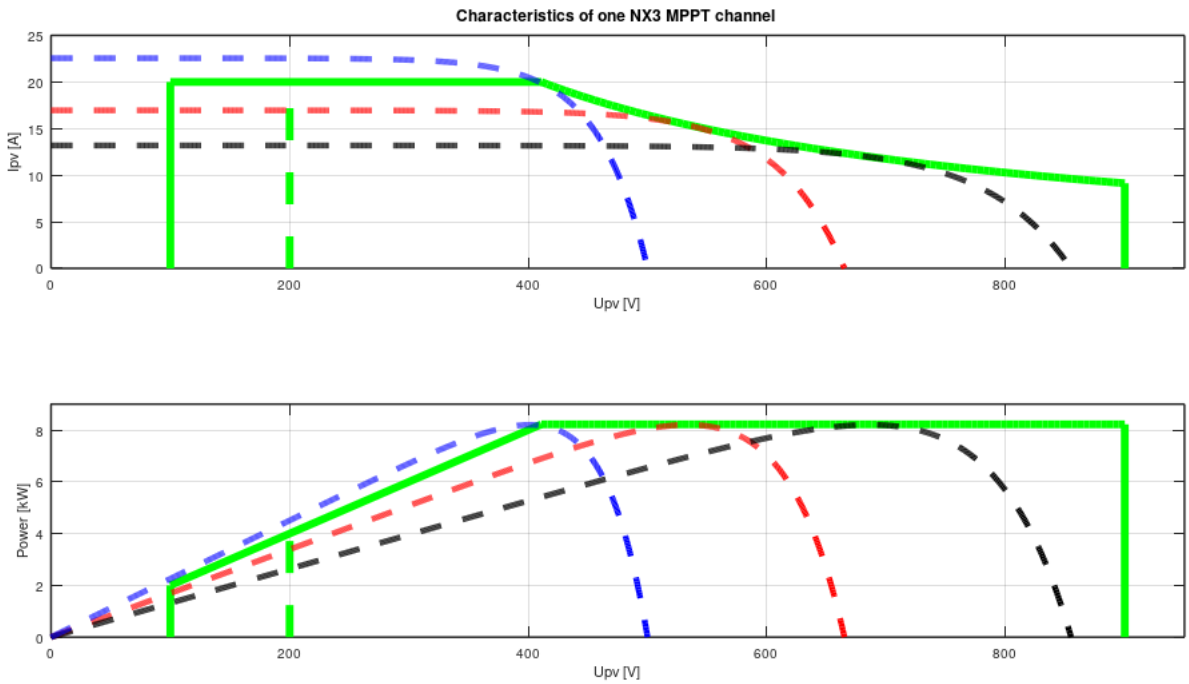

Tests of the efficiency performed by an independent lab showed the following result for the conversion efficiency from solar to grid:

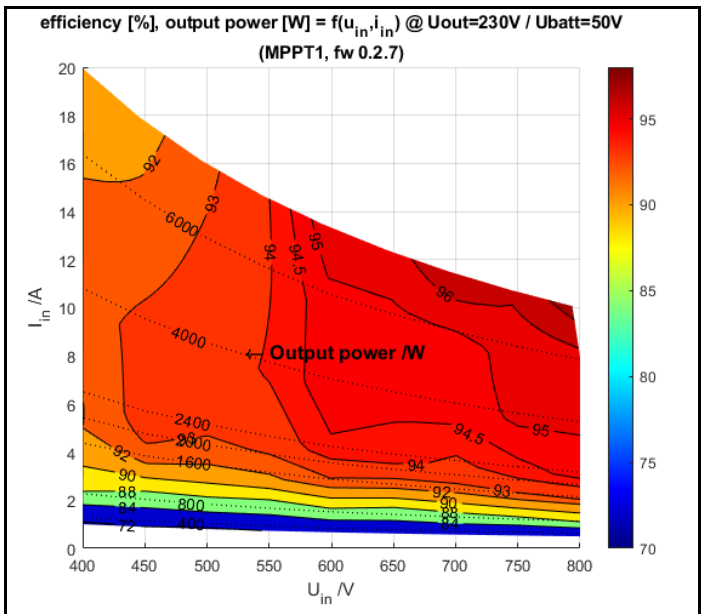

Efficiencies next3

Max solar to grid conversion:	97.0%
Max solar to battery conversion:	95.0%
Max solar battery to grid conversion:	95.0%
Max mppStatic:	99.7%
Max mppDynamic:	99.0%
European efficiency (*solar to grid):	92.0%
Californian CEC efficiency (*solar to grid):	93.0%

*Upv=700V used for solar efficiencies

5.4.1.1 Maximum current of the solar generator

The maximum short circuit current Isc allowed for selecting module is 27Adc. In operation the maximum current will be limited to 20A and the power per mppt to 8kW. Over dimensioning of the PV array is allowed. Per example to maximize production in winter even if there are losses in summer. In that case you have to ensure that the cable sizing and protections are installed according to the maximum short-circuit current.
In any case, the next3 will limit the PV current and/or the charging current (battery) to the rated and/or programmed currents. All those limitations are automatically managed by the next3 and there is no risk in case of over dimensioning the PV input power/current. The power production is electronically controlled and optimally dispatched in the system due to the PFD technology (Power Flow Dispatcher).
In some situation, the PV production could be limited by various other reasons at a systemic level because the next3 is in interaction with other elements. The battery has a charging current limit which can be further limited depending on the charging phase or the battery voltage. In offgrid application when the battery is full, the production will equal the AC loads. The maximal PV injection to the grid when there is no battery charging is 15kW (3x5kW grid feeding limitation).

5.4.1.2 Solar strings design

The solar generator is normally dimensioned to cover an important part or the entire energy requirement of the system. Once the PV power has been decided upon, it will be distributed among one or more MPPT units, wisely combining the modules among them. Modules with the same orientation and the same shading (if there is some) must be connected in the same string or there will be a risk of important mismatching losses.
These combinations in series and in parallel must be carried out according to the voltage and current limits of the next3 MPPT inputs. A margin to the Voc must be taken in countries with cold climate due to the thermal coefficients of the modules. Typically, a factor of 1.15 is taken in Switzerland up to 800m altitude (900V/1.15=782V), a margin of 1.2 between 800 and 1500m (900V/1.2=750V) and 1.25 above (900V/1.25=720V).

An example is provided below for a single MPPT string (example with 310W modules, 60 cells, 41Voc).

	N° modules in a string	1	7	8	9	10	11	12	13	14	15	16	17	18	19	20	21	22
One string	Voc (STC) [V]	41	287	328	369	410	451	492	533	574	615	656	697	738	779	820	861	902
	P dc (STC) [W]	310	2170	2480	2790	3100	3410	3720	4030	4340	4650	4960	5270	5580	5890	6200	6510	6820
	Vmpp NOCT [V]	30	210	240	270	300	330	360	390	420	450	480	510	540	570	600	630	660
	P dc (NOCT) [W]	230	1610	1840	2070	2300	2530	2760	2990	3220	3450	3680	3910	4140	4370	4600	4830	5060
Two strings in parr on one MPPT	P dc (NOCT) with two modules in parrallel [W]	460	3220	3680	4140	4600	5060	5520	5980	6440	6900	7360	7820	8280	8740	9200	9660	10120

In the case of a 310W module with 60cells between 8 and 20 modules are recommended. 7 modules could be theoretically sufficient to start the inverter but in real conditions this could provide too little voltage.

21 modules in series are possible in hot countries (without margin! Consider the local installation rules) and about 17-18 in cold countries. The open circuit voltage must be carefully checked with temperature coefficients given by the PV modules manufacturer.

When two strings are in parallel on one MPP channel, there can be up to maximum 17 modules in series order to avoid PV production capping. Up to 20 modules can be used with a high probability of capping.
In total between 10 (3.1kWp) and 80 modules (24.8kWp 4x 20modules) can be connected, giving a high flexibility for the dimensioning of the energy system.

5.4.2 Connection

The two MPPT with each 2 connections are situated below the next3:

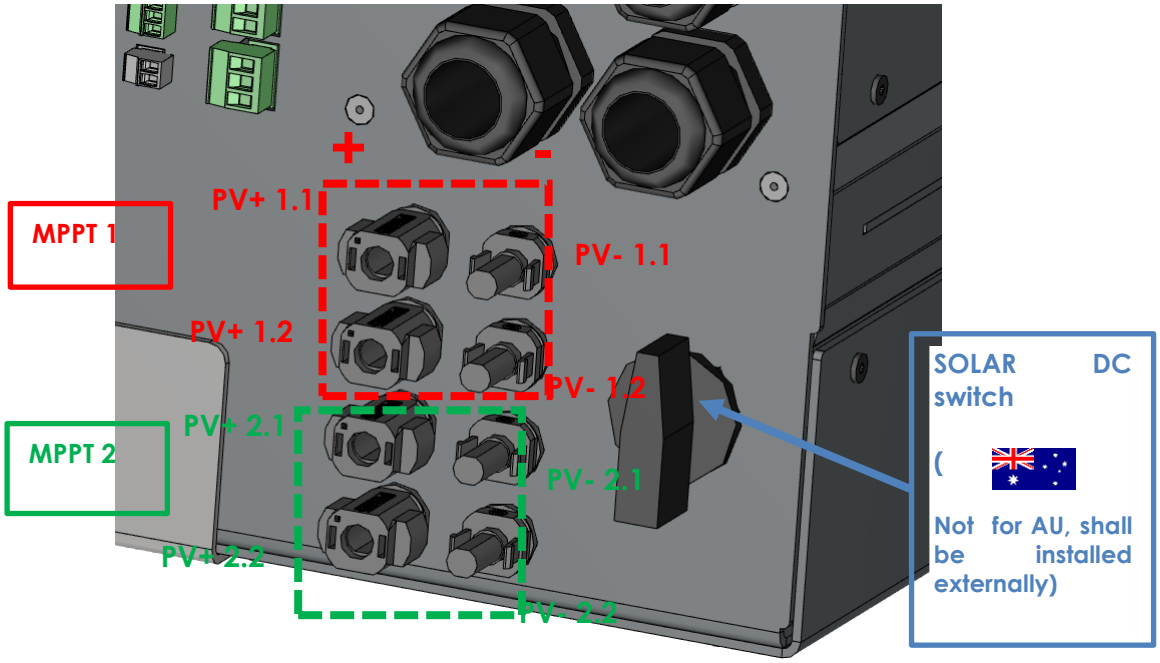

the PV+ is situated left and the PV- is situated right. Check carefully the indications written on the NX3 in case of doubt.

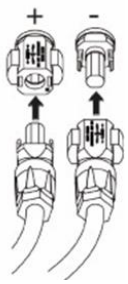

For one MPPT, if two strings are connected in parallel, they must be composed of the same types of modules, and the same number of modules, to avoid voltage mismatch and production losses.

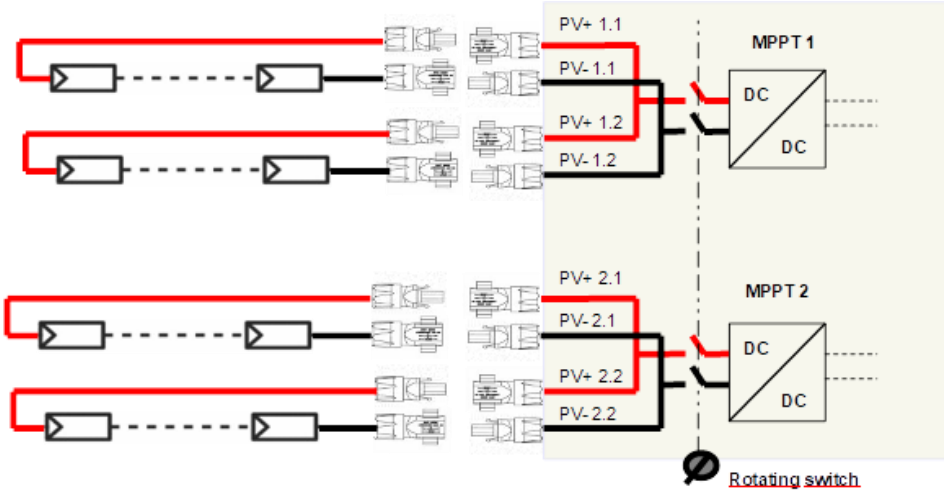

The Australian version has a specificity:

- The PV switch has been removed. An external PV -switch must be installed by the installer. This must be listed compliant with the Australian regulation (DC isolator certificate AS60947.3)

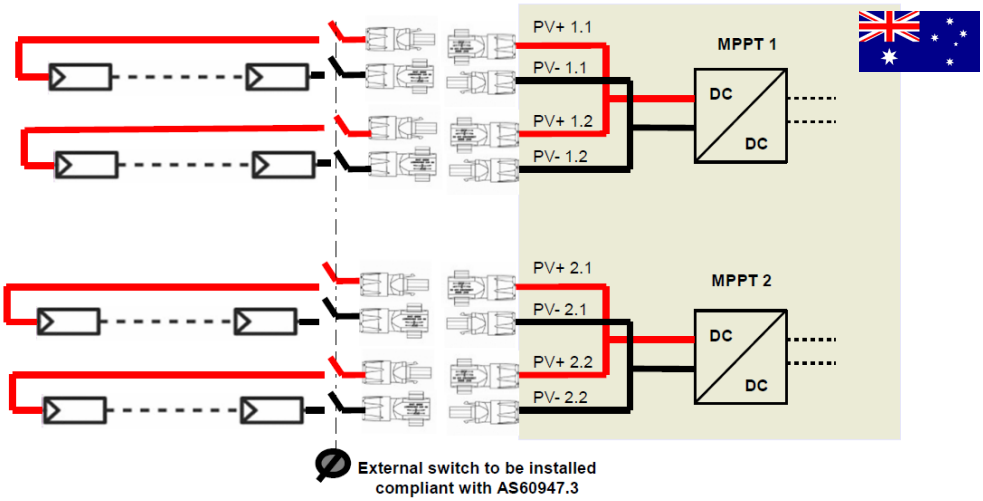

5.4.3 Earthing of PV

The MPPT topology is non-isolated for best efficiency, so the poles of the PV must not be grounded. The electronics was designed to avoid fluctuating voltages on the PV poles. In operation, there is a constant voltage on PV+ and PV- compared to the ground referential. This avoids leakage current through the parasitic capacity between cells and ground and therefore avoid problems with RCD breakers (return current default).

⚠	The PV input of the next3 is non-isolated, which means the PV+ and PV- must be floating (similarly to the majority of Transformer Less, TL, solar inverters). The PV must not be grounded. Accidental grounding will be detected and cause a stop of the next3 inverter. The frame of the PV modules should be grounded. PV modules must have a Class A rating according to IEC 61730.

⚠	As the Open Circuit voltage (Voc) of the panel is above 60Vdc (in all the temperature range), the whole solar system must be installed according to protection class II. Use proper connectors and cables for all the solar system, as requested by local regulation.

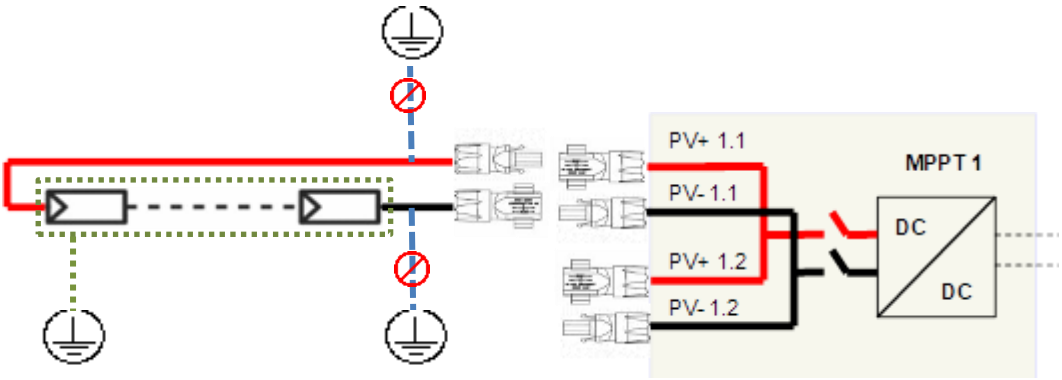

Never ground PV+ or PV-. Ground the PV modules frames

5.4.4 Cables and cross-section

The next3 is build from factory with Phoenix Sunclix connectors for the PV inputs of the MPPTs. There are4 pairs of Sunclix connectors provided with the unit to assemble on your PV wires arriving to the unit. These connectors can be assembled without special tool. A flat screwdriver is necessary to decouple the connected once enclicked.

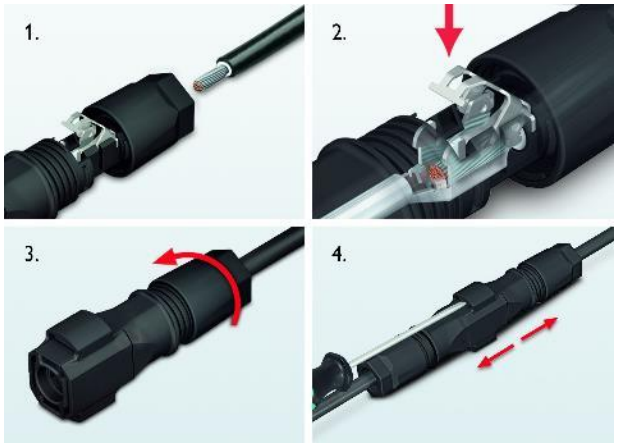

(image from phoenix contact, supplier of Sunclix connectors)

The minimal section for cables in Sunclix connectors is 2.5mm². Sunclix connectors are rated: 2.5mm²: 27Adc / 4mm²: 40Adc / 6mm²:40Adc. We advise you use a 4 or 6mm² cross section to reduce the cable losses in the system even if a 2.5mm² cross section would have been enough. In any case follow local regulation for cable sizing regarding the short-circuit current (Isc) of the PV generator and length of cables.

If you wish to install two PV strings in parallel for one MPPT, this can be assembled as well out of the Next3, for example in the junction box on the roof. This can minimize the number of cables used. The parallel strings can be connected together before the next3 solar entry as long as the maximal short-circuit current (Isc) of 27Adc is not reached.

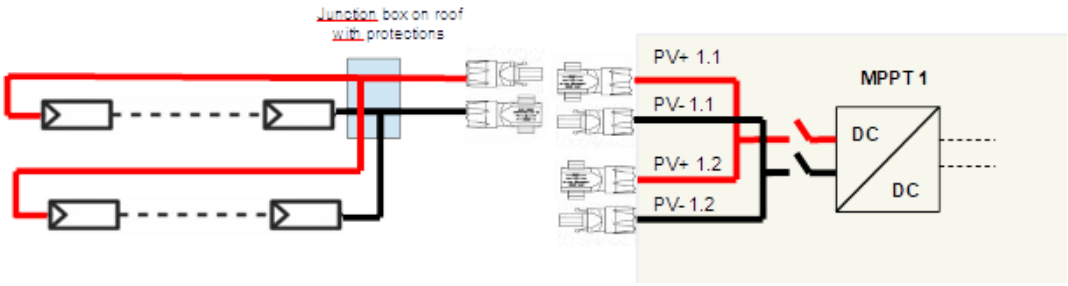

5.4.5 Protection devices

Wiring protection devices (fuses, circuit breakers) connecting the PV generator to the next3 must be installed in accordance with local standards and regulations in force. Special rules are existing for fire hazard and access to switching devices by firemen.
The internal PV switch of the NX3 disconnects all poles between the PV generator and the charge regulator.
PV modules are often exposed to stormy weather. It is highly recommended to install lightning protection. This is mandatory in some countries. Please see local standards and regulations in force.

5.6 LIGHTNING PROTECTION

According to the installation site, it is highly recommended to develop a protection strategy for your installation. The strategies depend on various factors specific to each site; we recommend therefore a professional approach to this issue.
The next3 has internal protections against lightning by means of surge protection devices. These devices have an energy dissipation capacity limited to 3,5kA (8x20 µs) which guarantees a certain protection level but are not a total protection against lightning. Furthermore, these protections are for single use. Therefore, in the event of a lightning strike where these surge protections are hit, you'll have to send the unit for repair. They cannot be replaced nor repaired on site.

⚠	Damages due to lightning often result in significant costs (full replacing of the printed circuit board, PCB) and are not covered by Studer Innotec's warranty.

Contact a specialist on surge protective strategies to check how you can best protect your system in all inputs/outputs (AC and DC).

5.7 Connecting the Studer communications cables

The Studer nx communication bus is used to interconnect next3 inverters in the case of a multi-unit application, to connect the nx-interface or to connect other types of devices with communication compatibility.

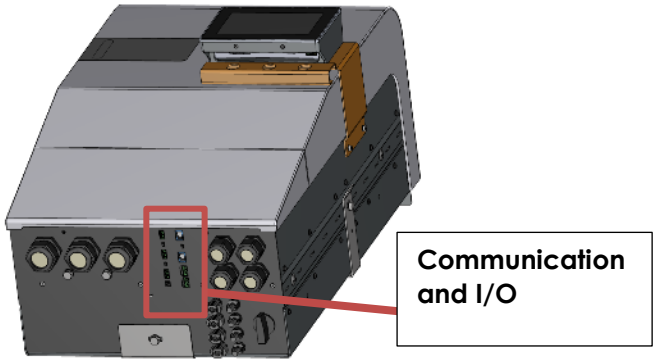

The NEXTs are equipped with a pair of RJ45/8 connectors that allow information transfer via a communication bus in between next3 devices or accessories that use the proprietary protocol of Studer-Innotec. In this network, all parties in the network are connected in daisy chain.

The cables for Studer nx bus are straight ethernet of category 5 exclusively with 26AWG wire size (power supply through cable). They are provided by Studer or you can buy your own as long as it follows these requirements. The total length of the communication bus cable between all units must not exceed 75 m.

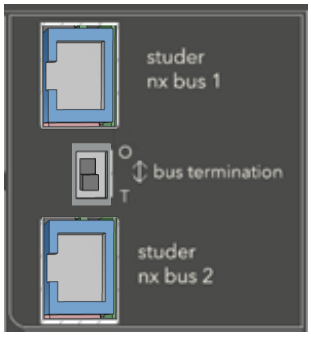

The switch for the communication bus termination remains in position T (terminated) except when both connectors are in use. In this case, and only in this case, it must be placed in the O (open) position. If one of the two connectors is not in use, the termination switch will be in position T.

In a system comprising a single next3, the connection of the nx-interface or nx-gateway units may be conducted without stopping the next3 (hot plug).

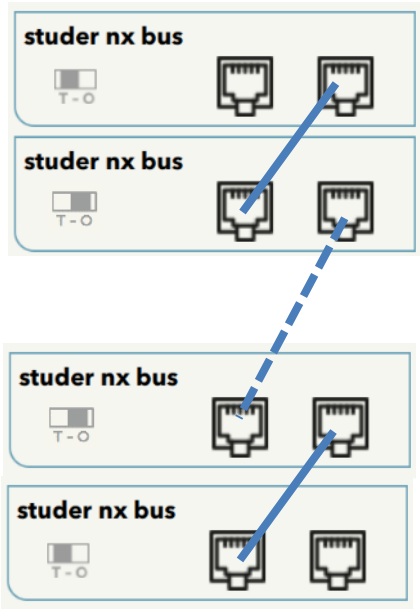

A single connection is used : T

Both connections are use : O

…

Both connections are use : O

A single connection is used : T

⚠	These connectors must be used only to connect a compatible next3 accessory, **excluding any other type of connection such as LAN, Ethernet, ISDN, batteries BMS, etc.** The next3 communication is not compatible with other Studer communication. It is **not** compatible with Xtender devices and it must never be directly connected together.

	Any unauthorized connections could cause the destruction of the devices.

A standard configuration with 3 next3 and one nx-interface is shown here below:

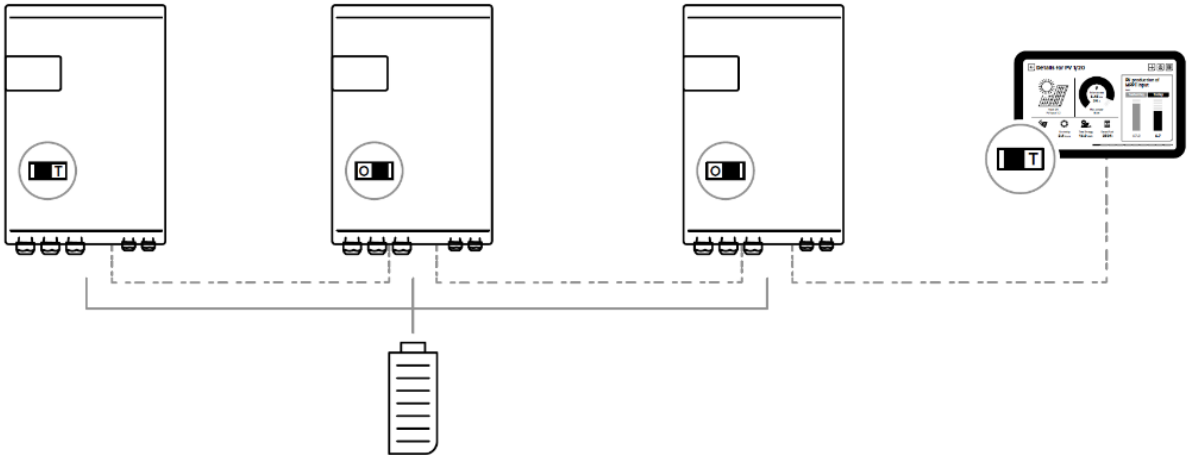

ℹ	When connecting one device with other compatible devices using the same communication bus, it is highly recommended to make a software update of all components in the system to guarantee their proper compatibility/functionalities. Therefore, before starting the setup of the device, download the latest software version from our website: www.studer-innotec.com and copy it to an USB key. The update is made by the remote control nx-interface.

5.7.1 Connection of the nx-interface

The nx-interface can be fixed on the nx3 with the dedicated support or hanged remotely in a place closer to the end-user of the system. It must be connected to the studer nx-bus.
The total communication cable length in a system is 200m. The nx-interface is powered through the cable, so his type must be ethernet of category 6 exclusively with 24AWG wire size (power supply through cable).

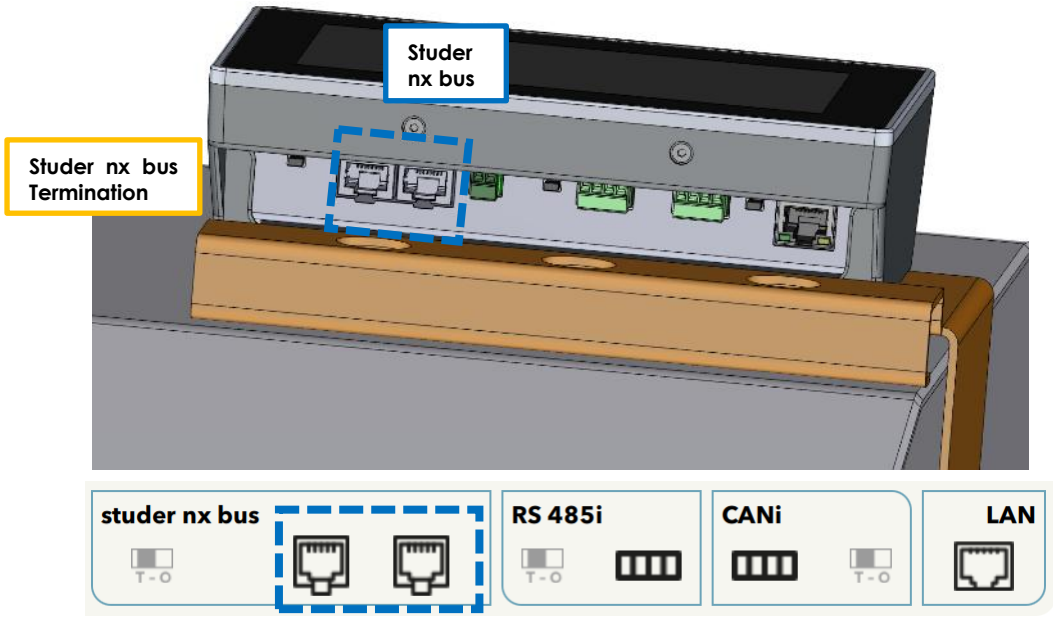

The state of the Studer nx bus termination on the nx-interface can be seen on the screen, this is only for the connectors situated on the nx-interface.
Note: the RS-485i and the CANi on the nx-interface are unused for the moment.

5.7.2 Connection to Internet

The connection can be done with

- A connection with an LAN cable. If Internet is available at your router, there is no special configuration to do.
- A wifi connection that can be selected in the second page of the internet connection configuration. Scan the available wifi, select one and enter your password.

The connection to your LAN and internet is done with the nx-interface on the Ethernet port.

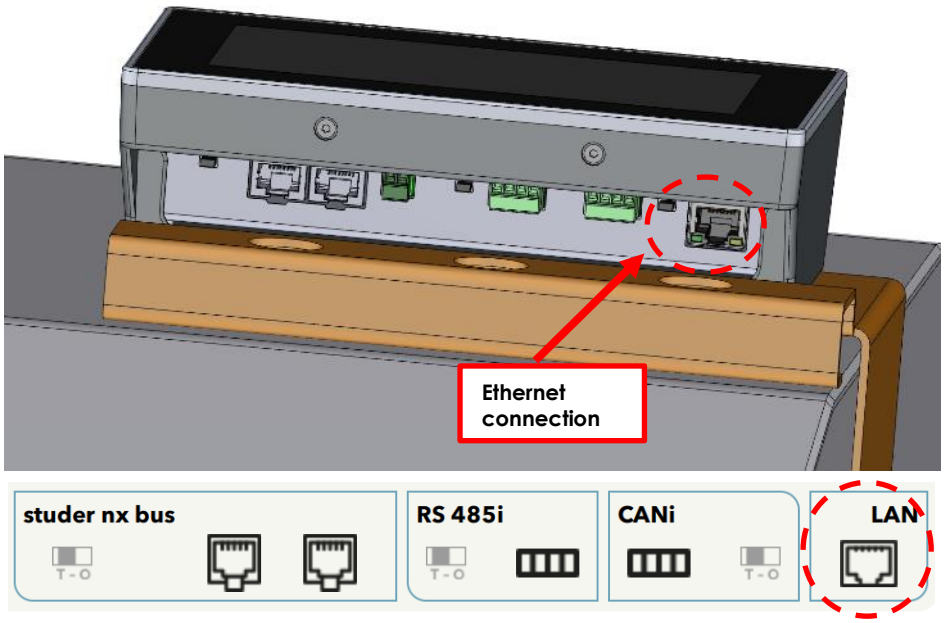

Differentiate carefully the ethernet connection with the two led on the low side of the connector.

The second way of connecting the next3 to the internet is the use of Wi-Fi.
This is done with the Wi-Fi USB stick provided by Studer-Innotec. Don't use any other stick as there are drivers necessary and there is a high probability that it will not work.

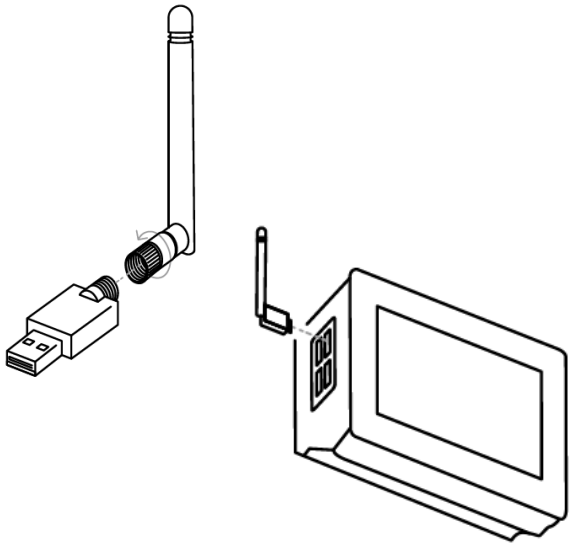

For the LAN connection, there is no setup to do. For the Wi-Fi connections, you must select the Wi-Fi network and enter your password.
The internet connection set up is described in the programming chapter of the nextOS manual.
See the chapter "configurations" for the setup of the internet connections.
In remote area, you can find your own GSM 3G/4G/5G router (not provided). Studer-Innotec is not responsible for the proper operation of those devices and of your internet connection.

5.8 Wiring auxiliary I/O

Auxiliaries are all located at the bottom of the next3.

5.8.1 Auxiliary contacts

There are two reversing contacts that are potential-free available in nx3 unit.

Various settings are available to give activation conditions to each contact. To program functions to these contacts, please refer to the chapter about the configuration of the next3 and the section about the auxiliary contact in this manual.

Wire the C (common) in any case and the second position in function of your application and your settings. In relax state, there is a contact between C and NC (Normally Closed). An activation gives contact between C and NO (Normally Open) and disconnect C and NC. The representation of the contact near the terminals corresponds to the status of the contact when not activated.

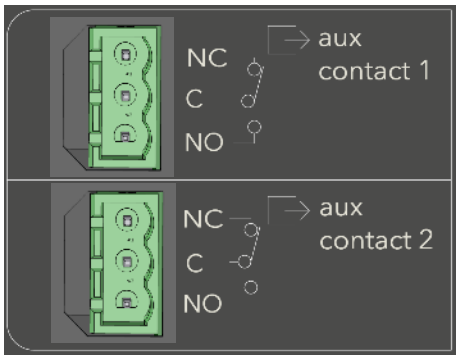

Male connectors are provided with the NX3. The admissible currents and voltages for these contacts are 16 A: 250 Vac/24Vdc or 3 A: 50 Vdc max.
The connector has a male and female parts. Doublecheck the correct pinning when plugging the connector on the nx3.

5.8.2 Command Inputs

IN1 and IN2 are inputs that can be active with a 5 to 60Vdc voltage to the return reference. The nominal voltage is 12V.

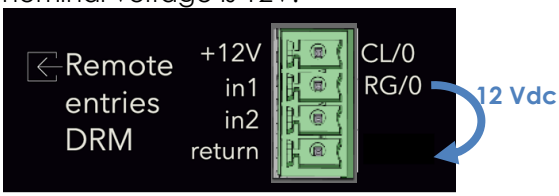

The 4 poles connector is supplied with the nx3. Double check the correct pinning when plugging the connector on the nx3.

A +12Vdc supply is available on the connector for the use of dry contacts. Don't use it for other purpose than the activation of input entries. The current is limited. External 12Vdc are activated/deactivate with settings in the device menu (settings on the nx-interface).

The various possibilities are given with the schematics below:

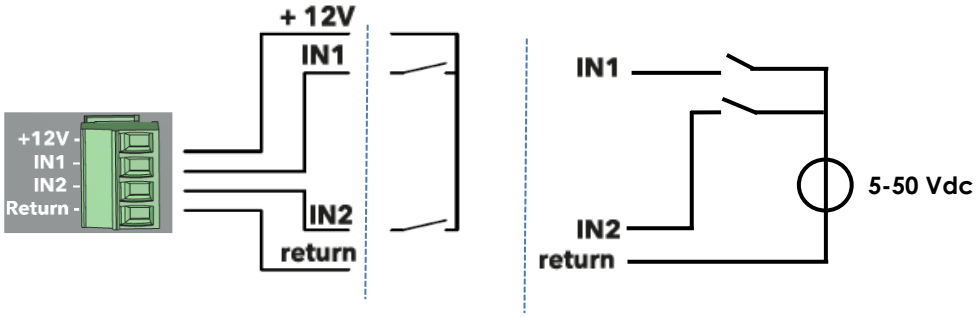

For activation with a dry contact:
Supply voltage with +12Vdc, go to the contact and come back to the wanted input (in1 or in2)

For activation with an external source: a potential of 5Vdc to 60Vdc must be applied between an input and the return.
Entry impedance is 10kOhm

5.8.3 DRM function and command input 1 (AU-NZ version)

The Australian version of nx3 has a specificity regarding the inputs. The command input 1 is used for the demand response mode DRM0 function requested by the AS/NZS4777.2 when Australia or New Zealand grid code are selected.

Available DRM inputs (only DRM0):

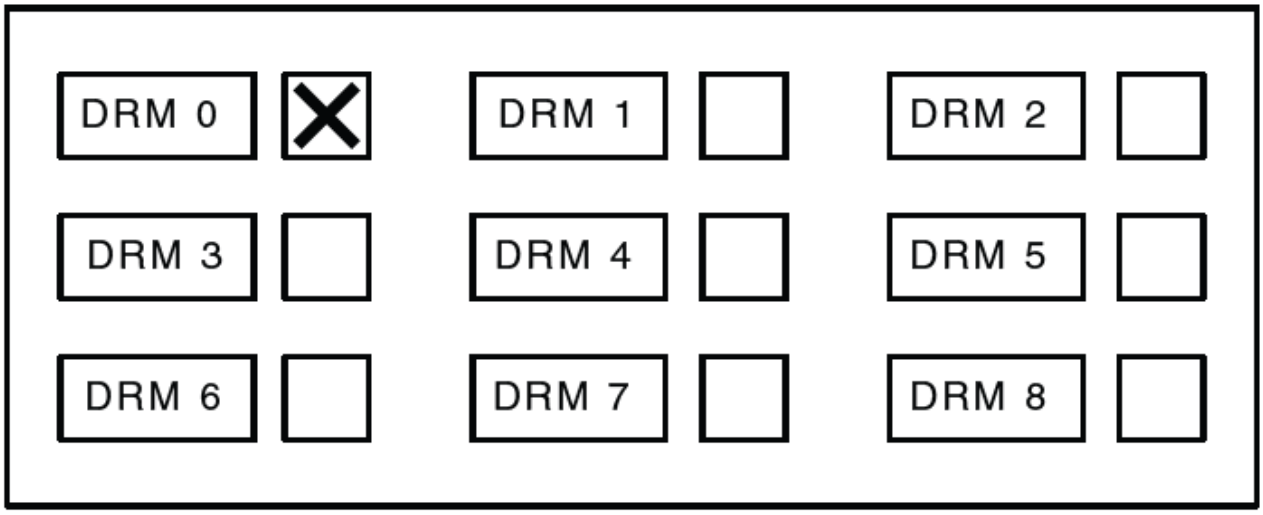

The DRM0 mode is asserted by shorting the terminal block "RG/0" and "CL/0" positions of the DRM port. The next3 will detect the DRED system cable missing and the inverter will not connect to the grid.

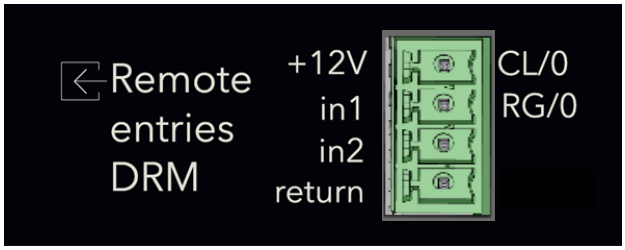

If no DRED system is connected to the next3, then a DRED bypass device should be connected as specified in the AS4777.2 (15kOhm).

In multi-unit system, always use the remote entry 1 of the first inverter for this functionality.

The second input in2 is available for other freely programmable functions and is activate as described above with a 12V short with a dry contact or an external voltage.

5.8.4 RS485i

This physical connection is used to communicate with accessories with MOBDBUS RTU. The compatible accessories are:

- Xcom485i-nx for communication with variotrack and Variostring in the system.
- The energy meter Powermeter for house introduction measurement.

This RS-485i connection is for official compatible accessories of the next3 only.

Note that a Modbus slave to read values and change settings of the system is implemented on the nx-interface, not on this connection. See the chapter about the nx-interface and on Studer website, https://technext3.studer-innotec.com/modbus-next

5.9 MULTI-UNIT CONFIGURATIONS

Up to three next3 units may be used together in parallel. They are connected on the same battery bank or on separate battery banks to create a high-power inverter-charger system.
Two units of next3 can work in parallel creating an 32kVA inverter with an 80A transfer (55kVA). Three units of next3 can work in parallel creating an 48kVA inverter with an 80A transfer (55kVA). This is available from the software version 1.3.0.0 and higher.

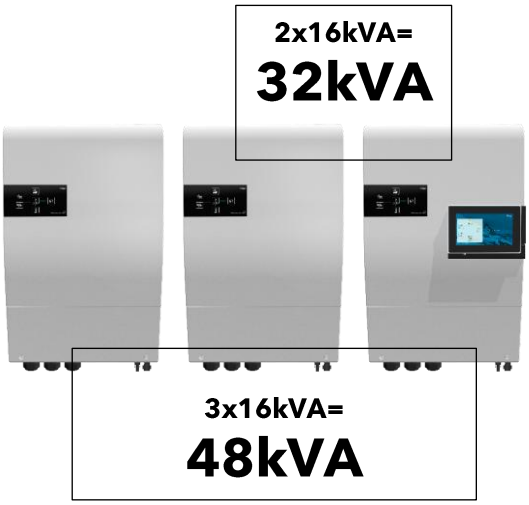

The following points must be followed:

- In multi-unit systems, next3 are interconnected via a communication with "Studer nx communication bus". This is mandatory for proper synchronization of units that must absolutely work together
- Units should be close to each other (in the same room).
- Each device must have the same software version, updates are available on the Studer website (https://technext3.studer-innotec.com or https://studer-innotec.com/downloads/).
- The nx-interface is mandatory for configuration.
- All elements must be connected together and powered before the initial configuration. All elements must be clearly identified during the configuration process with the wizard.
- Use only one nx-interface per system. The system will not work properly with multiple nx-interface communicating at the same time on the bus.
- A reconfiguration of the system with the wizard is mandatory when you add new elements to the system.
- All the AC-Loads connections of each next3 units of a system must be connected in parallel, for each respective phase (through a distribution panel for example).
- All the AC-Source and AC-Flex ports must be kept separated. The purpose of each port is chosen during the wizard.
- All the AC-Flex ports configured as FlexLoad must be kept separated. The different AC-Flex can be programmed separately.
- Only one AC-Source connection for the grid (if available), and one AC-Source or AC-Flex for the genset (if available) will be used in a system. There is an identification process during the configuration of the system with the nx-interface (wizard). That means the maximum transfer is 80A and 80x230x3= 55.2 kVA.
- The three next3 work as one in a system, except for:
    - The PV inputs are independent.
    - The AC-Flex as load can be programmed independently, they must not be wired together.
    - The AUX relays and CMD IN are independent.
- The compatibility is only between next3 units. Don't mix with other Studer-Innotec products like the Xtender. This will not work and probably damages the devices.
- In many countries, the official metering of solar installations change of category above 30kVA and requires a different scheme. Be sure to respect the local regulations for this point.

5.9.1 AC in multi-units

There is only one grid and one genset connection in a system. The different AC-Source of each next3 must be kept separated.
Below is the example for the standard grid-connected case for two units.

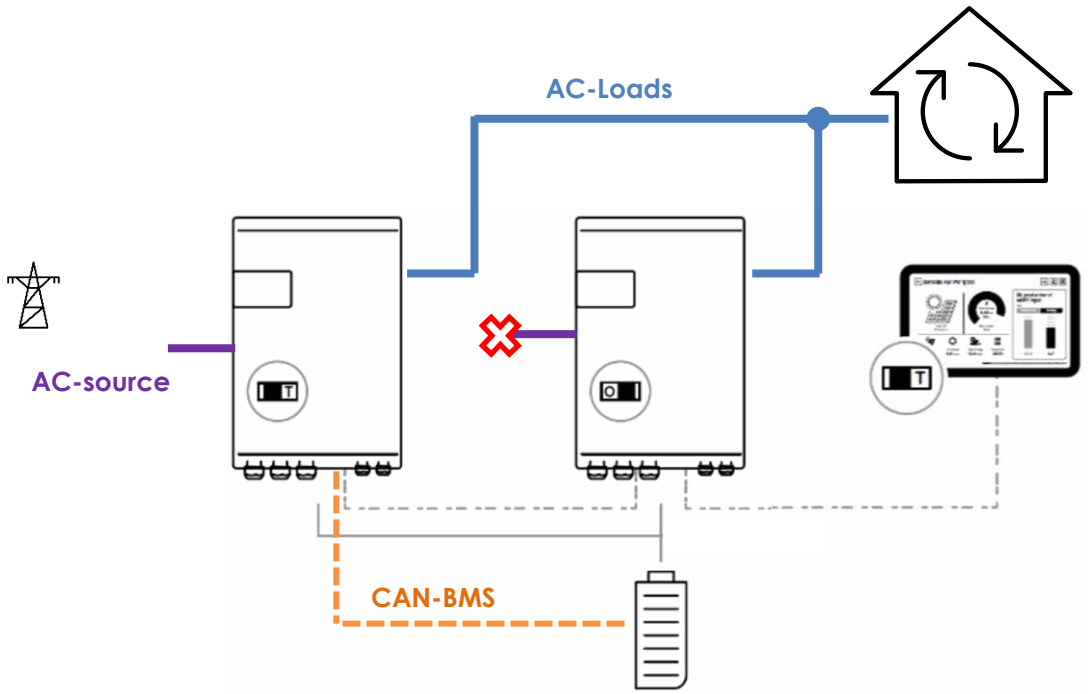

And for three units:

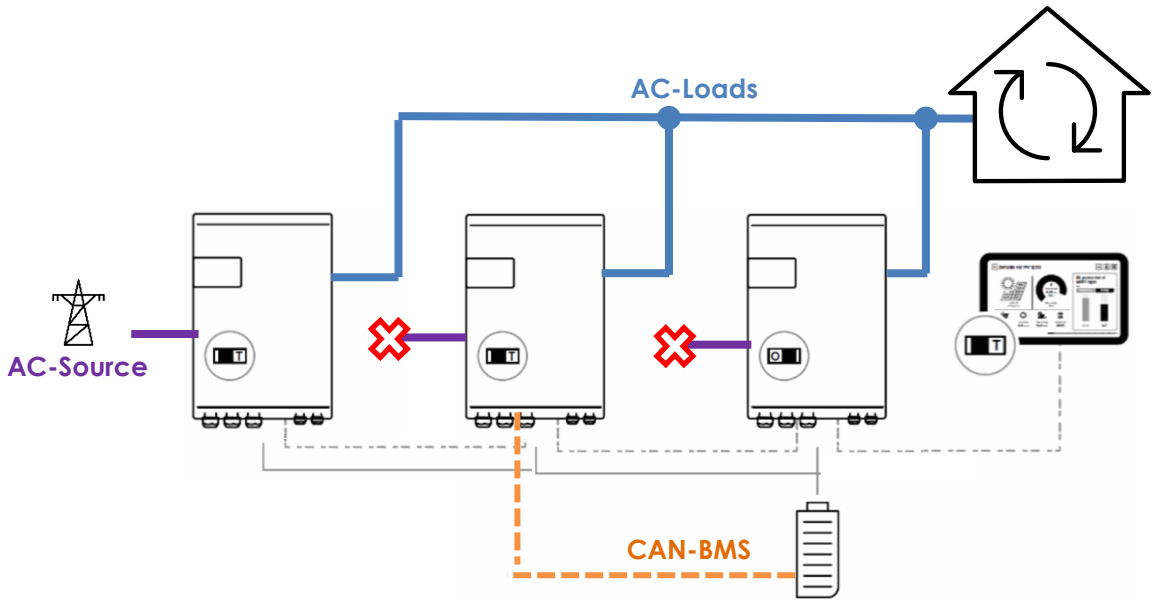

During the wizard, the proper unit that is physically connected to the grid/genset must be selected. See the configuration section of this manual for details about the setup of multi systems with the wizard.

When using a genset at the same time as the grid, it is advised to use the AC-Source of the second inverter. One is connected to the grid and one to the genset.
That way all AC-Flex are available for flexible loads.

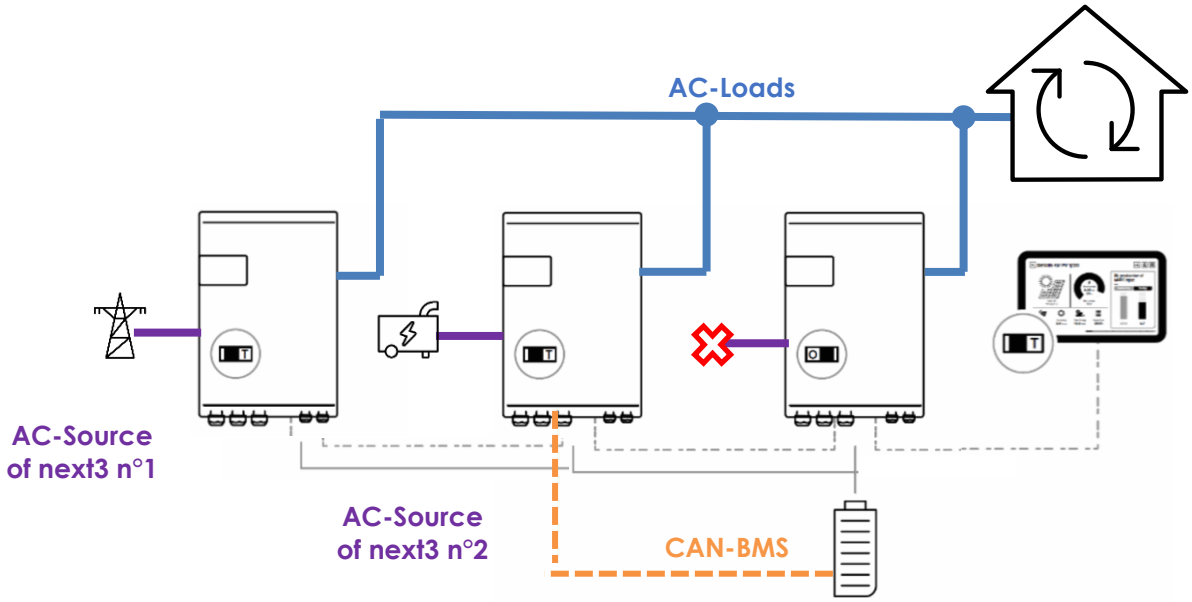

5.9.2 Battery in multi-units

In a multiunit system, one battery with BMS is communicating with one next3, they must be physically connected with the CAN-BMS cable, and it must be paired properly during the wizard process.

It is allowed to have one common battery or multiple batteries. With one common battery, the can-BMS is linked to one next3 only. It must be identified and configured during the wizard process.

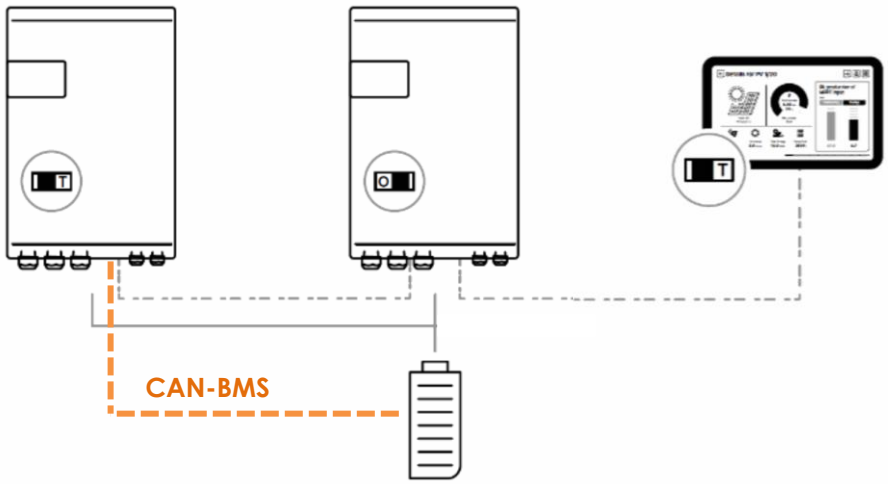

Don't mix the communication bus of the batteries with the nx-bus. The communication with am BMS must be done with the battery wired to the same next.

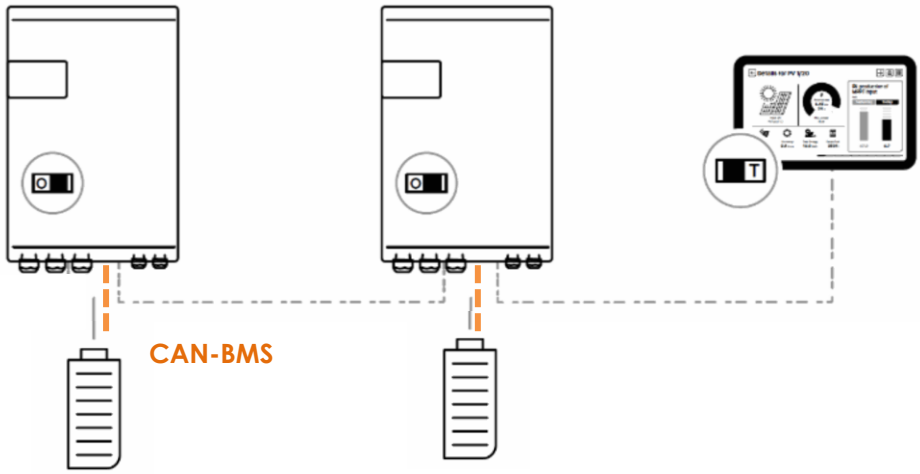

The communication bus to the battery BMS, the battery DC connection and the nx-bus are isolated from each other's. There is no special requirement for the connections of multiple batteries. Per example, the minus (or plus) can be common, but this is not required. Each pole can be grounded or left floating. The installer is not constrained by the next3 but must respect the official installation rules of his country for his type of application.

With lead acid batteries, each next must have its own temperature sensor.

ℹ	In multi-unit systems, the charge/discharge current of each unit is automatically chosen by the PFD (Power Flow Dispatcher, which is a patented control algorithm). Just give the properties of each battery during the wizard process. The used rules are: • The charge/discharge is distributed proportionally to each battery capacity. • The charge/discharge limits are used independently. • Each SOC is managed independently and limits are respected (if they are not at the same level at start per example or bad configuration was done). Example: two next3 are in parallel and only one has solar connected to its MPPT entries. In that case the two batteries are charged anyway, proportionally to their battery size. The energy flows through the AC-Loads common connexion.

5.9.3 Extension of an existing installation

It is possible to extend an existing installation by adding one similar next3 units in parallel. The software compatibility of the new and old units is mandatory.

⚠	Equipment belonging to the same system must be operating with the same software version. Download the latest software version from the Studer's website and update the software for <u>all</u> units of the system independently before commissioning.

6 SPECIAL CONFIGURATIONS

6.1 AC-COUPLING

AC-coupling is the use of battery inverters and PV inverters in the same system. The different elements are connected via the AC lines.

The AC-coupling can be useful in various situations.

- To add solar on an existing next3 system directly in AC.
- To update an existing solar system with more solar and batteries with the use of the next3. The grid inverter is left in place and some additional solar is connected to the new next3. It is a premium choice for the case where microinverter or optimizers are used because it would be complicate to rewire the solar roof.
- It is also interesting for large systems, as it is not always wanted to have the full power with the backup inverter. Per example a 50kW solar system with 30kW of backup capacity would have 2 next3 in parallel and a grid inverter with up to 30kW of solar.

6.1.1 General system design

Studer-Innotec advises the following design rules for AC-coupling systems:

- The solar power in Ac-coupling should be smaller than the battery inverter power.
    - For one nx3, the AC-coupled solar should be smaller or equal to 15kW.
- The grid inverter should have the modern function of power production reduction in function of the frequency of the grid to work in island mode. Else use to the simplified AC-coupling configuration.
- The battery capacity should be sufficient to absorb all the AC-coupled power.
    - At least C/5 power with lead acid battery
    - At least C/2 power with lithium battery
- For robustness of the system use a mix of AC-coupling and DC-coupling.
    - This allows for black start of the units after an undervoltage of the battery.
    - With ac-coupling, if the battery inverter is stopped, everything is stopped.
- In case of use of a genset on AC.-source instead of the grid, it is not allowed to have backfeeding to the genset. It may be causing troubles to the generator.
    - In that case the designer must take countermeasures to avoid this. The simplest way is to disconnect the solar inverter when the genset is connected.
- The standard way to make AC-coupling is to use of the AC-FLEX connection with the proper settings. That way all the solar can be monitored automatically. This is important to understand later what happen in the system for the end user of the system.

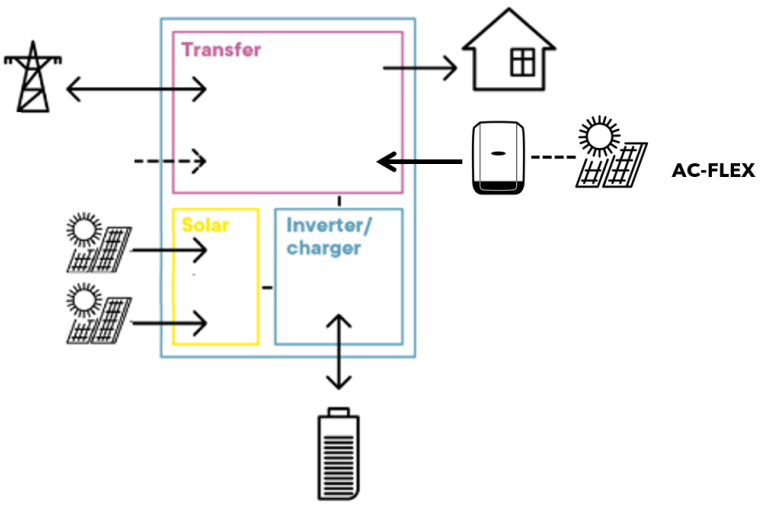

6.1.2 AC-coupling with frequency shift

The frequency shift control uses the properties of grid inverters that must reduce the power production when the frequency of the grid increases in order to participate to the grid stability.
The frequency between 50 and 50.2Hz is used for primary control of the grid. The solar inverter must reduce linearly their power production between 50.2 and 51.5Hz.

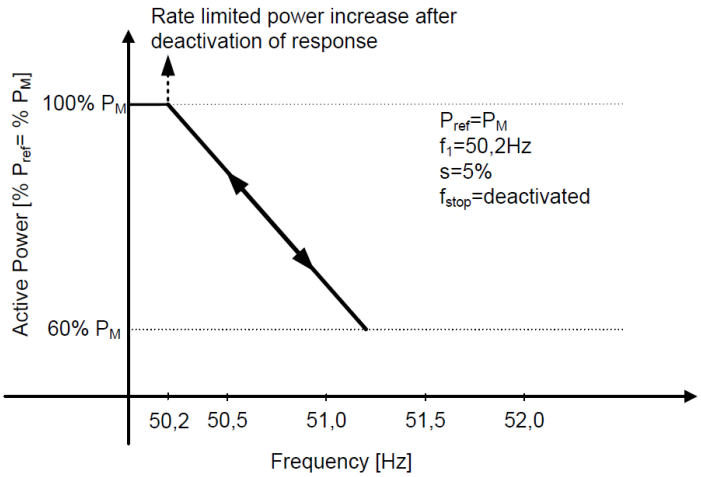

In Offgrid mode, the next3 creates the voltage/frequency and then will modulate the frequency in function of the energy needs in the system.

6.1.2.1 Setup

See the nextOS user manual for a full description of the programming.

6.2 EXTERNAL BYPASS FOR REDUNDANCY

The next3 is an all-in-one hybrid solar inverter (with battery). This device is connected between the grid and the house, directly after the introduction and the main meter. The grid is connected to the AC-source terminal, the loads are connected to the AC-Loads and AC-Flex terminals. The AC-Loads and AC-Flex terminals can be powered by the batteries in case of a mains failure. An internal relay in the next3 device opens in the event of a power failure.
The AC-Flex output is a second output of the inverter which can be driven (internal relay of the device) or simply used to measure the consumptions separately (the Next3 monitors/records all electrical flows).
A bypass should be installed for redundancy in case of inverter failure. A double bypass can be installed if AC-Flex is used.

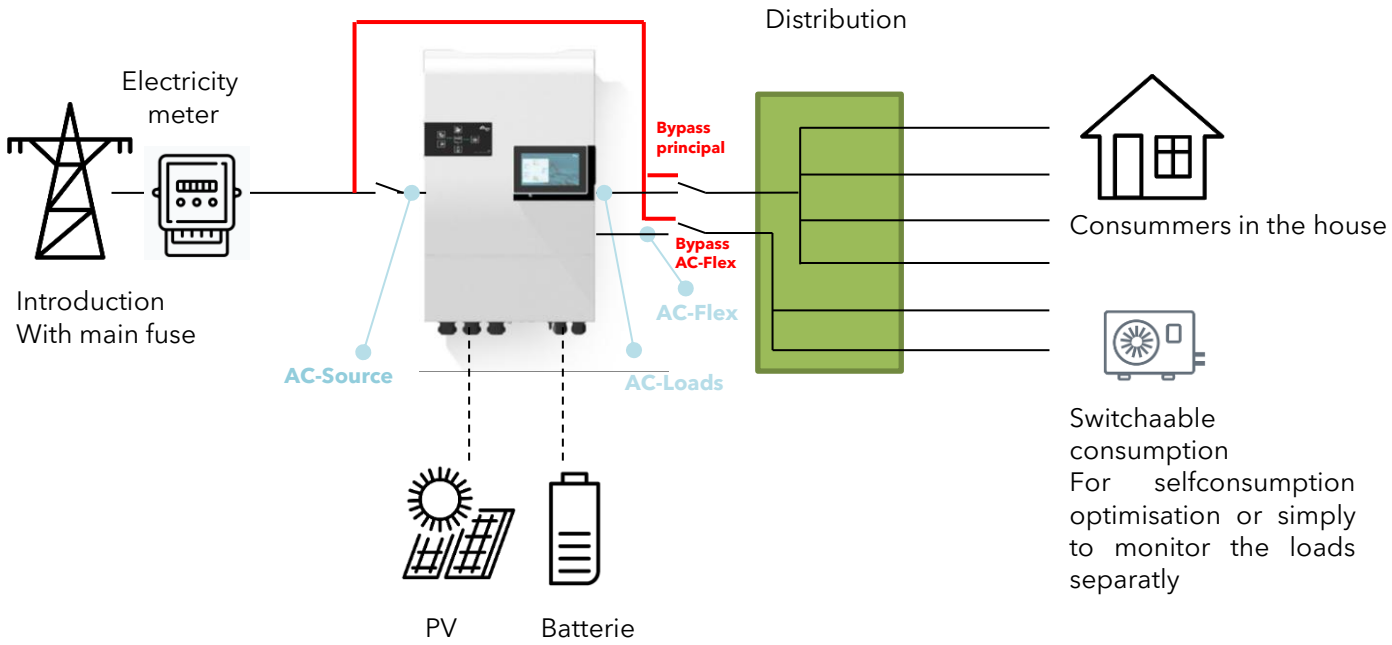

The bypass can be of several types: automatic or manual, single or double (for AC-flex included).

6.2.1 Simple manual bypass

In that case a simple manual swich over is used.

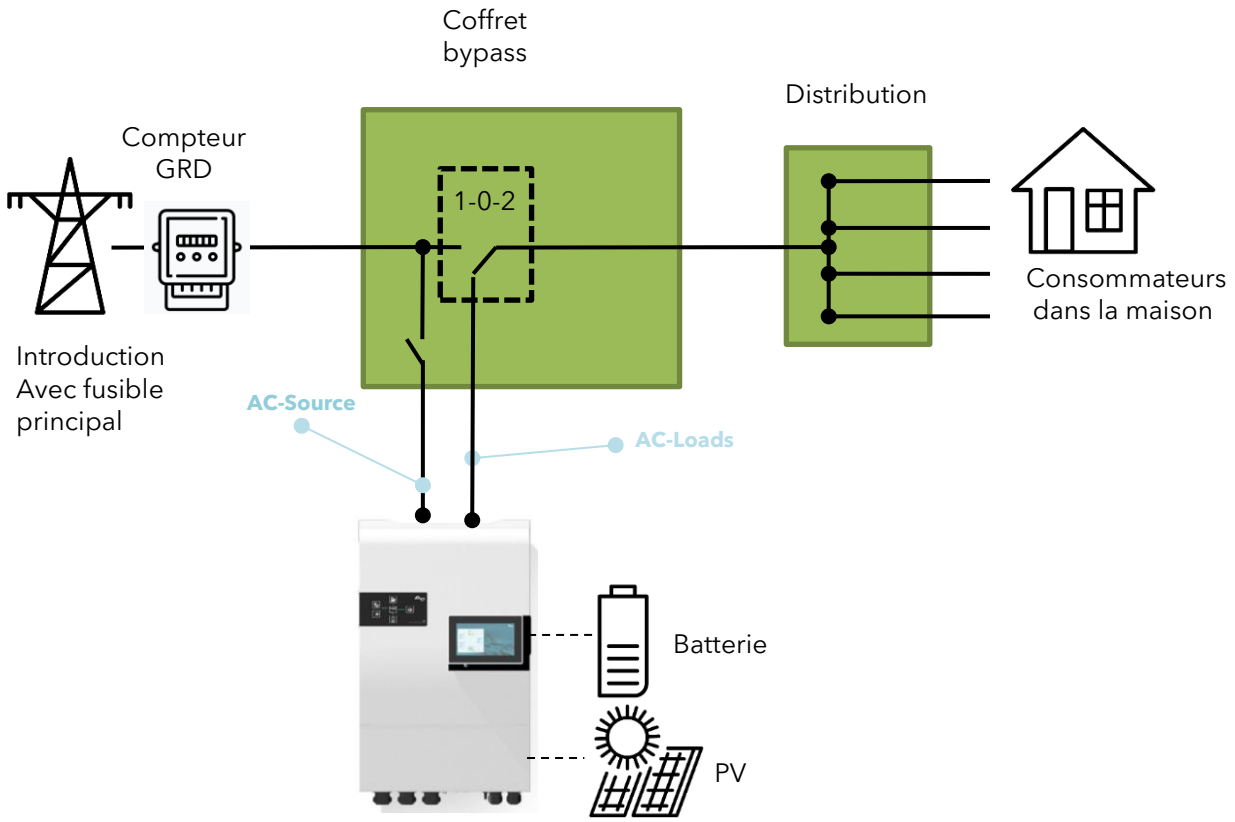

6.2.2 Automatic bypass

In this case, an automatic bypass is realized by relays controlled by the presence or absence of voltage of the grid or of the next3.
The following schematics is recommended by Studer:

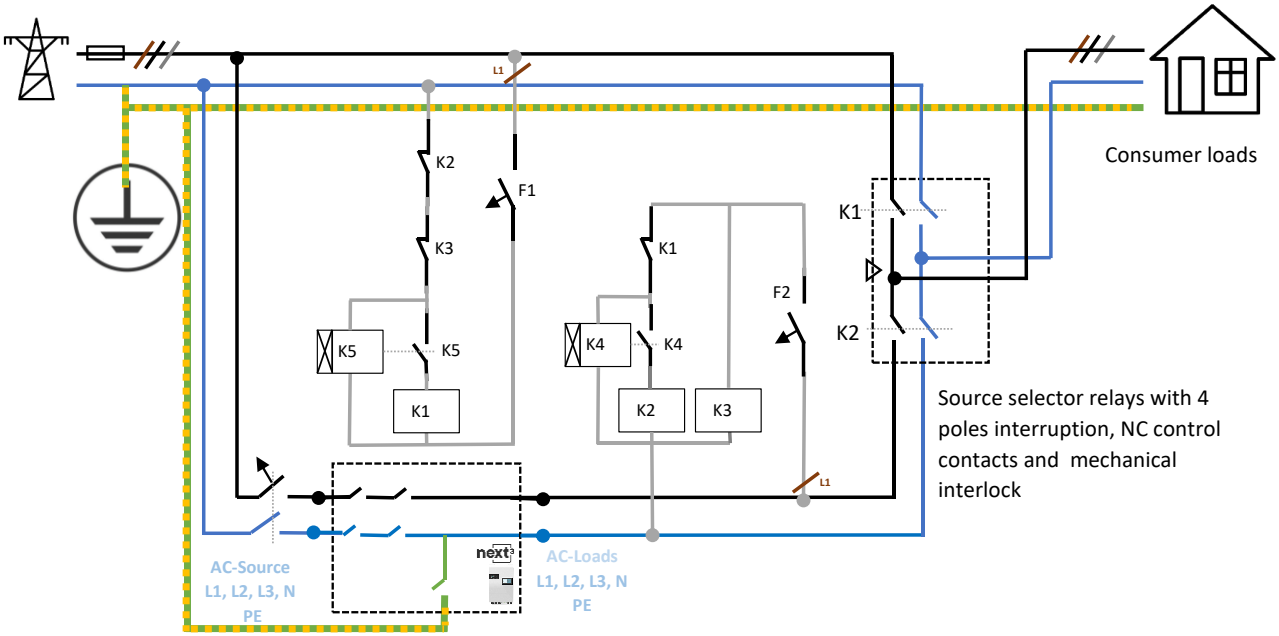

As in all source selector, a mechanical interlock is mandatory to ensure that no short-circuit is possible. An electrical interlock of the controls guarantees a defined state. A relay is used to give a priority to the next3 if is working (K3).

6.2.3 Operation with a power meter

In that case, a smart power meter is installed at the electrical main entry point of the building. This measurement unit allows the next3 device to know the balance of consumption-production and then to decide when to charge or discharge. In this configuration, a solar inverter (AC-solar) or loads can be connected upstream. Only the allowed power meter supplied as accessory by Studer-Innotec must be installed. It must be connected to the next1 RS485i port using the MODBUS RTU communication cable.

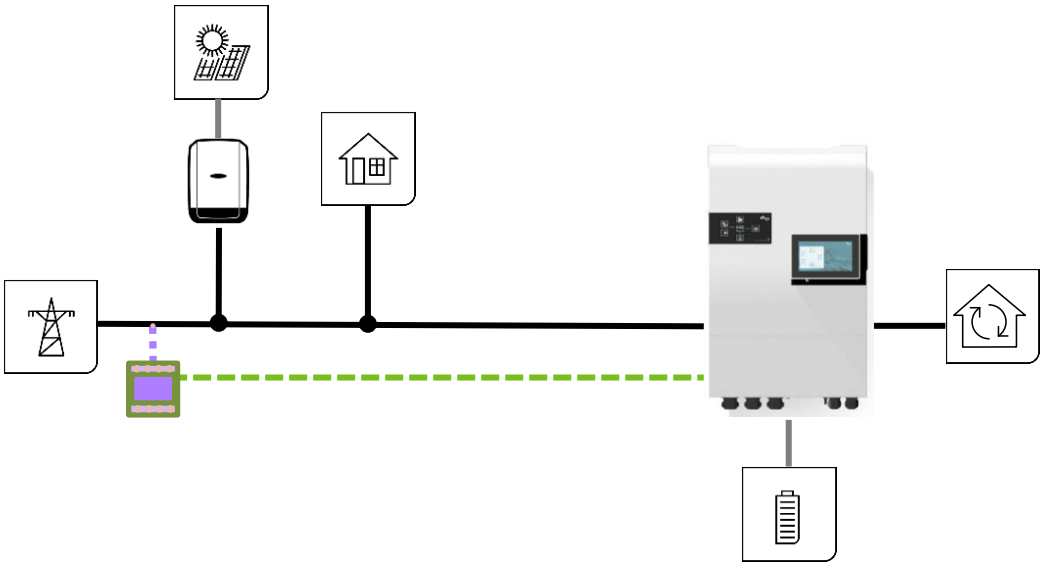

The presence of the external power meter must be configured during the commissioning wizard.

The compatible power meters are:

- Threephased direct connection: EM540 DIN AV2 3X S1 X
- Threephased with CT: EM530 DIN AV5 3X S1 X
    - Current transformer: CTA-5X. Choose the needed current (100A, 150A,… 600A)
- Single phase direct connection: EM511 DINAV8 1X S1 X

See nextOS manual for more details.

7 POWER-UP OF THE EQUIPMENT

⚠	There are dangerous energy sources inside the cable compartment. It is imperative that the closing cover for the connection compartment is installed and screwed tight before energizing the installation!

The powering of the next3 starts with the battery. The unit cannot be powered by AC or solar without battery. Verify that the PV DC switch is open and there is no voltage presence on the AC wires.
When supplying the 48Vdc voltage on the battery connection, the next3 device beeps and all lights turn on for a few seconds. After that, your next3 installation is in the following state:

- The next3 is OFF (no AC voltage on the AC load connector)
- The red LED (with"!" sign) is permanently light on, because the next3 is OFF (LED2)
- The battery is connected (battery symbol is light on) (LED6)
- The voltage production on Ac Load is disabled (house symbol is light off) (LED5)
- The solar chargers are disabled (PV array symbol is light off) (LED7)
- The connection to Ac Source is disabled (grid/genset symbol is light off) (LED3)
- The Ac Flex is disabled (both grid/genset and house symbols are light off) (LED4)
- The nx-interface lights-up and start his boot process.

7.1 FRONT PANEL BUTTON

In the middle of the front panel, the ne[xt] part is a button with the following functions available depending on how long the button is pressed:

- **Impulse push**: clear error(s), stop beeping
- **Short: 1 second < press < 3 seconds**: ON/OFF of next3 and all its functions. Signalled by one beep after 1 second.
- **Long:3 seconds < press < 10 seconds**: the button has no effect when you release it, this is for the case when you pressed long by mistake. Signalled by two beeps after 3 second.
- **Longer: press >10 seconds**: all devices are reset. Signalled by 5 beeps after 10 seconds.

You can hear a beep after ~1sec, ~3sec and ~10sec and you can release the button to achieve the associated function at that moment. The front panel button can be deactivated/activated via the nx-interface (but it's not advised).

To power ON the next3 and all its functions: push the front panel button until you hear the first beep (or use the ON/OFF button of the nx-interface). After this, your next3 installation is in the following state (please note that it takes ~5sec to start all converters):

- The next3 inverter is ON.
- The "!" red LED is permanently off, because the next3 is now ON without errors
- The battery is connected (battery symbol is light on)
- The voltage is provided to Ac-Loads (house symbol is light on)
- The solar chargers are enabled (PV array symbol is light on if the solar chargers are working, or blinks once if the solar chargers are not working because there is no sun)
- The connection to Ac Source is enabled (grid/genset symbol is light off or light on depending on your configuration)
- The Ac Flex is enabled (grid/genset and house symbols are light off or light on depending on your configuration)

Your installation is now in operation!
If the system requires configuration or setting modifications, carry them out immediately. These must be modified by means of the remote control nx-interface.
Please note that powering from the grid without battery is not possible. The next3 system cannot operate as a PV inverter without storage. If there is no battery connected, the next3 will not start and shows no indications.

7.2 Front panel LED indicator

The front panel has the necessary information to understand the state of the next3 with the LED lights.

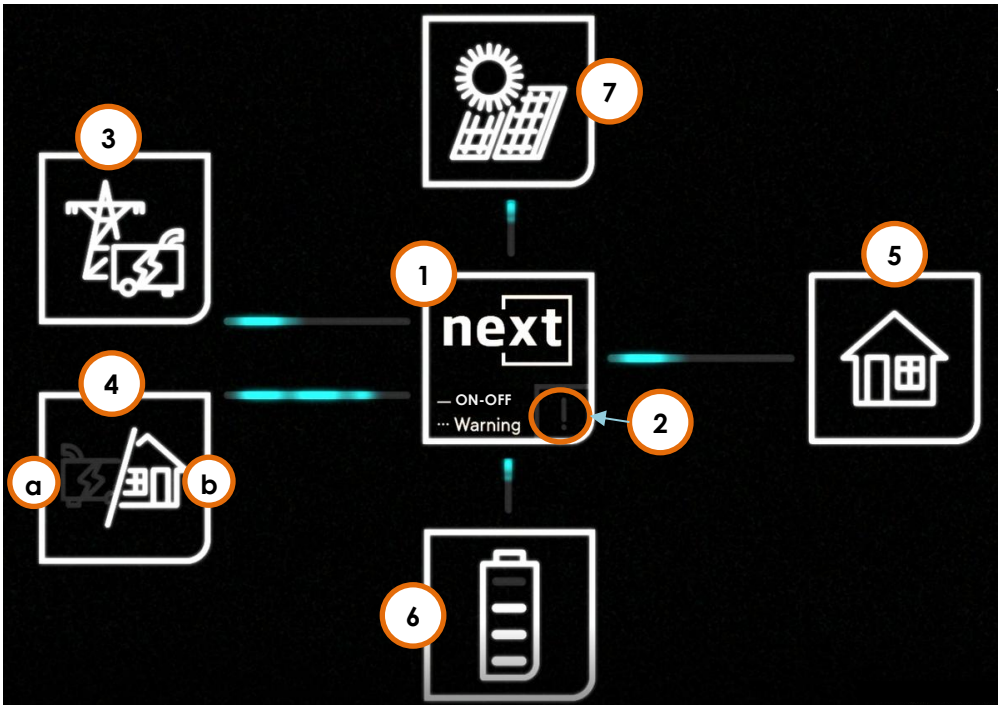

The rack version front panel presents a different look with the same functions:

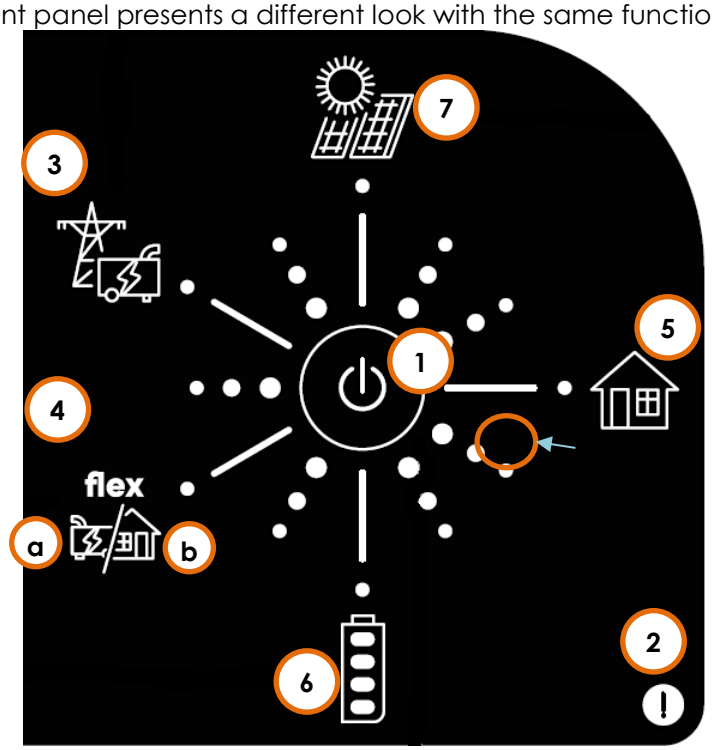

The table hereunder describes the information or type of error according to the number of times an indicator flashes.

N°	Indicator	blinking	Explanation
1	Central ne[xt]	permanently OFF	next3 is OFF
		permanently ON	next3 is ON

	indicator (**blue light**)	1x	next3 has warning(s) or error(s) (please see the nx-interface for details in warning messages)
2	Central ! indicator (**red light**)	permanently OFF	no error, at least one converter in the system is turned on
		permanently ON	next3 is OFF
		1x	battery discharge is stopped due to low battery voltage
		2x	overload due to either a short-circuit or too high load for the inverter
		3x	decrease of the inverter power output due to a too high internal temperature. This may be due to overload of the device, too high ambient temperature or obstructed ventilation.
		4x	other error(s) (please see the nx-interface for details in messages)
3	AC-Source indicator	permanently OFF	source is deactivated, or not present
		permanently ON	source is connected and working properly
		1x	source is present but next3 is in waiting procedure for connection
		2x	exceeding the source maximum allowed power
		3x	phases order is incorrect, or one phase is missing
		4x	source has other warning(s) or error(s) (please see the nx-interface for details)
4a	AC-Flex as a source indicator (genset symbol) (house symbol is permanently OFF)	permanently OFF	source is deactivated, or not present
		permanently ON	source is connected and working properly
		1x	source is present but next3 is in waiting procedure for connection
		2x	exceeding the source maximum allowed power
		3x	phases order is incorrect, or one phase is missing
		4x	AC-Flex has other warning(s) or error(s) (please see the nx-interface for details)
4b	AC-Flex as a load indicator (house symbol) (genset symbol is permanently OFF)	permanently OFF	loads are not powered
		permanently ON	loads are properly powered
		1x	standby / load search mode
		2x	AC-Flex has other warning(s) or error(s) (please see the nx-interface for details)
5	AC-Loads indicator	permanently OFF	loads are not powered
		permanently ON	loads are properly powered
		1x	standby / load search mode
		2x	loads have other warning(s) or error(s) (please see the nx-interface for details)
6	Battery indicator	permanently OFF	battery is disconnected, next3 is not powered up
		permanently ON	battery works properly
		1x	battery is almost empty
		2x	battery has other warning(s) or error(s) (please see the nx-interface for details)
7	Solar indicator	permanently OFF	solar is deactivated or not present
		permanently ON	solar is producing properly
		1x	Night or dawn/dusk
		2x	no solar production since 48h
		3x	solar has other warning(s) or error(s) (please see the nx-interface for details)

State of charge indicator: 4 bars in the battery symbol:

- 75 to 100 %
- 50 to 75 %
- 25 to 50 %
- 0 to 25 %

In charge mode, the upper LED line inside the battery blinks indicating the charge phase:
- 1 time: bulk
- 2 times: absorption
- 3 times: equalization
- permanently on: floating

For lithium batteries with BMS, the upper line never blinks as there are no charging phase controlled by the next3. The charge is controlled by the BMS.

Special cases:
- If there is absolutely no light on any of the LEDs, the next is completely without power (battery disconnected) or there is a problem with the display of LEDs.
- When powering up the next3 with the battery, all LEDs blink once during the start check.
- All LEDs can blink at the same time in an identification procedure (with nx-interface). It is possible to identify the devices in multi-unit system that way:

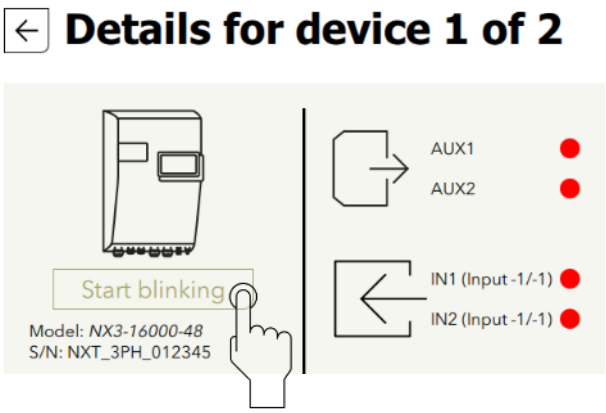

7.3 Beep indicator (Buzzer)

The sound produced by the next3 buzzer uses the same beep sequence as the central "!" red light flashing sequence.

This buzzer can be deactivated/activated with the nx-interface

This buzzer can also be deactivated/activated with the *next* button of the front panel. The button must be pushed for 5 seconds < push < 7 seconds (release after the 3rd beep to toggle the function). In any case, the sounds when pressing the button to identify the functions described on chapter 5.2 will remain active.

8 INTERFACES: NX-INTERFACE, WEB, PORTAL

The end-user can interact with the next3 with different interfaces: with the remote touchscreen nx-interface, on the web monitoring portal and with the APP on a smartphone/tablet. It is also possible to communicate with the next3 with machine to machine via communications through Web API to the portal and MODBUS.

The nx-interface connected to the next and allows to:

- **Visualize** the state of the next3 system, present and past values, including the log of the events that happened to the system.
- **Configure** the devices: The next3 configuration can be modified by the installer/user at commissioning to adapt the equipment to the energy system in the best possible way. The normal process to configure the next3 is the use of the "Configuration Wizard" at the commissioning. This is a step-by-step procedure that helps you to configure the system in a simple way. This avoid mistakes and is the preferred way to configure the device. Individual settings are also accessible for each part of the next3. The factory values of these settings are reported in the table at the end of this manual.
- **Record monitoring data:** To analyse what happed in the energy system, the nx-interface stores measurements data in its internal memory and on a usb memory stick for later analysis (csv files).
- **Be connected:** The nx-interface is also the gateway to the outside world. It allows to connect a system to the internet and the Studer monitoring portal. If the nx-interface is connected to the internet, the recorded data can be sent to the Studer web portal user account(https://portal.studer-innotec.com). The nx-interface is also the gateway to MODBUS communication with third party control systems.

A user level system allows the installer to manage the access rights and the complexity of what is shown to the end user, from "*View Only*" to "*Expert*" with the right to modify any settings.

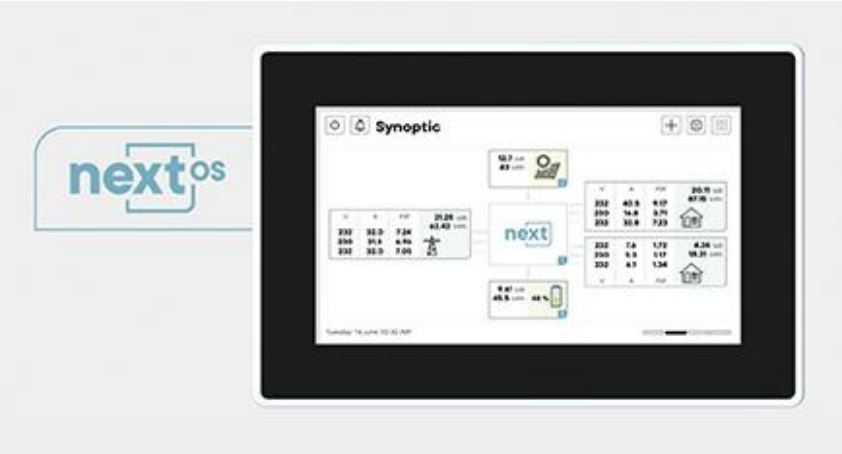

	The interfaces and the programming are the same for all the devices of the next range. The documentation is provided in a unique document, the **nextOS user manual.** Find it in the download section of the Studer website: https://studer-innotec.com/downloads/

9 COMMISSIONING

9.1 INITIAL CONFIGURATION

A next3 installation requires an initial configuration with the nx-interface. This must be done following the configuration wizard. Be sure to have an nx-interface on your installation for the first commissioning.

The next3 will not start its operation without this first configuration.

The standard configuration of the next3 energy system is done with a configuration wizard on the nx-interface. It is possible to modify single settings individually later the pages dedicated to each topic of the converter. On the first commissioning of the next3, the wizard will be automatically started, and all steps must be followed. To restart with factory settings, you must run the wizard again on an installation.
All the settings previously are forgotten when running a new wizard.

	The wizard is automatically launched on the first commissioning of the next3. At the end of the wizard process, the nx-interface is set back to the basic level. This is necessary to avoid the change of critical settings later by end customer (grid codes). To access the wizard, you need the expert level.

	The interfaces and the programming is the same for all the devices of the next range. The documentation is provided in a unique document, the **nextOS user manual.** Find it in the download section of the Studer website: https://studer-innotec.com/downloads/

9.2 MINIMAL COMMISSIONING INFORMATION

The basic elements you must know about your system before commissioning to answer the questions are:

AC-grid

- What is your grid connection?
    - What is the capacity of the electrical source, typically given by the breaker size, for example 16A/25A/32/40A on each phase is common in houses.
    - What is the grid-code to use? Generally, it is a single choice per country, but it may be many (per example there is Australia A, B or C)

AC-genset

- Do you have a genset in the system? If Yes
    - Is it a single phase or three phased?
    - What is the rated current per phase going to the next1 inverter.
        - Per example an 18kVA threephased genset that is able to give 15kW: 15000/3/230=21.74 A → rounded down to 21A. Take into account deratings due to ambient temperature, altitude, …
        - It is often given by the breaker size going to the inverter and limiting the current.

Batteries

- What batteries do you have?
    - Type: lithium, lead acid?
    - Communicating? With which protocol? Be sure it is compatible before commissioning (and buying)
    - Number of battery modules and capacity of one battery module and in Ah (per example an 5kWh battery at with 50V is 5000/500=100Ah)

Internet connection

- If the device will be connected to internet with Wi-Fi, have the wifi name, and login ready to enter them at commissioning (that can be done later, if not available).

10 OPERATION OF THE NEXT3 ENERGY SYSTEM

This chapter of the manual explains how to next3 operates and also some particularities related to settings.

See the nextOS user manual for the general use of the interface and programming.

10.1 AC-SOURCE

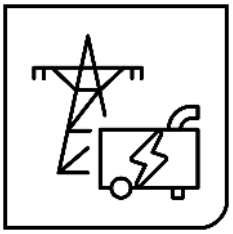

The next3 is a hybrid inverter charger, that can work in a stand-alone (offgrid) mode or connected to an external AC source, being a grid or a generator.
The next3 has a connection named "**AC-Source**" where the main AC source is connected: the grid or a generator.
This input:

- is limited to 80Aac and is designed for 3 phases system 400Vac with neutral.
- has a high security level with double security relays for disconnection according to VDE-AR-N 4105, EN 50549-1, IEC/EN 62109-1 and other standards. In case of connection to a distribution grid, always connect the grid to AC-Source. The proper opening of the relay is checked with measurements.
- is unique in a system. Only one AC-Source is physically connected in a system even with multiple next3 devices.

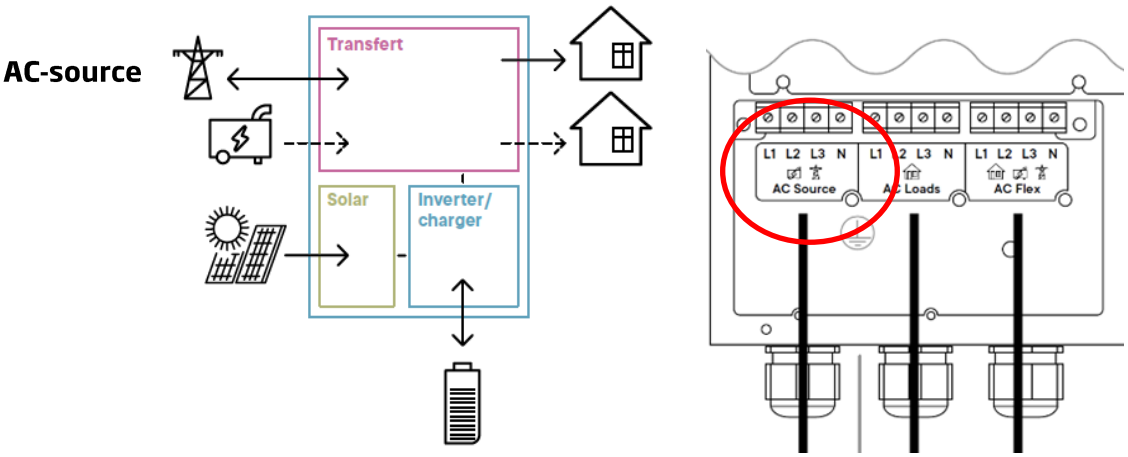

- The maximum accepted voltages at the input are by default (for grid connection, VDE values):
  - 125% of nominal voltage for 10ms (for fault ride thought: 230*1.25=287.5V
  - 120% for 5 second: 230*1.2=276V
  - 115% for 60sec means: 230*1.15=264V

10.1.1 Special AC-source Settings for Grid

The wizard is mandatory for a proper setting of AC-source as many points are configured during commissioning and cannot be changed later. Carefully read the questions to avoid mistakes in your answers.

One example is the grid code setting that must be set according to the DSO requirement by the qualified installer and cannot be changed later by the end-user. The end-user has no access to this parameter as it is protected by the EXPERT code.

At BASIC level only the following settings are accessible:

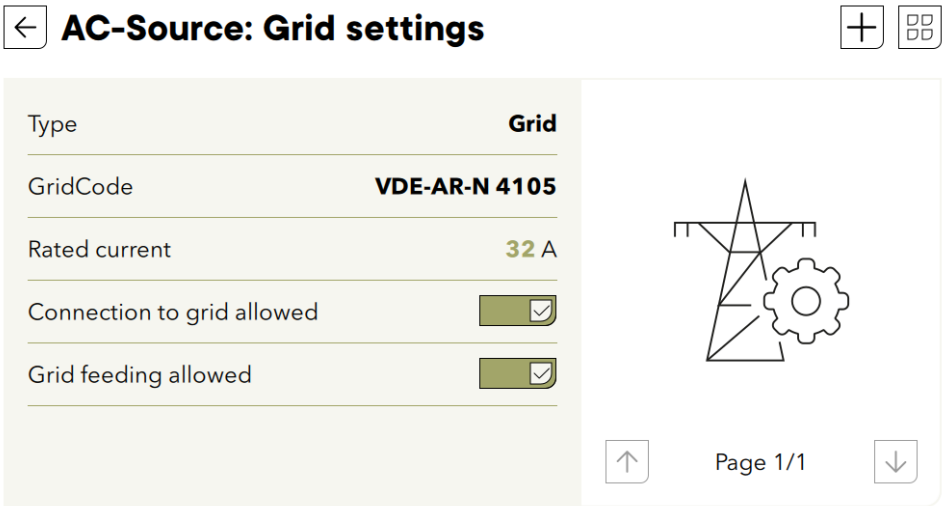

Concerning the grid code, the anti-islanding function implemented is based on the power variation method (called also "vector shift" method in EN and VDE). The reactive power management with functions Q fix, Q(U), cosφ fix and cosφ(P) can be configured, if necessary, after the wizard. The general control function (section 6 of AS-NZS 4777.2) is not implemented. The multiple inverter combination (section 5 of AS-NZS 4777.2) does not apply as the next3 is an all-in-one three phase inverter.

10.1.1.1 Reactive power management

Power injection in networks has the effect of increasing the voltage due to the impedance of the line. This is the opposite effect of the voltage drop with consumers. To compensate for local voltage increases in the network due to distributed generators, the DSO can require that the distributed devices produce reactive power.

It is possible to activate various operating modes managing the reactive power in the next3:

- Generate at a certain cos(phi) :
  - Fixed
  - Depending on the active power produced
- Generate reactive power depending on the voltage
- Produce reactive power directly.

The injection of reactive power, in addition to the production of energy with active power, makes it possible to correct the effect of the active power. This is highly dependant on the impedance (Z) of the line/cable, if it is more resistive (R) or reactive (X).
Do not activate these functions without the approval of the DSO. They must be calculated by him according to the properties of the lines. The production of reactive power generates losses in the next3 device and in the lines and is not necessary in most cases.

These settings are accessible in EXPERT(=Professional) mode. They are located in the network section of the nx-interface. Use the " + " button to access the list of advanced settings:

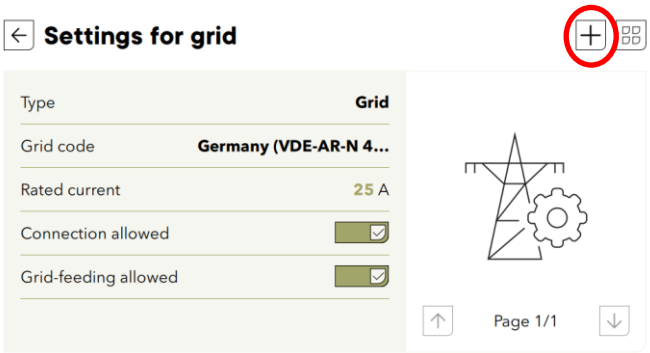

The choice of the type of reactive power production is made with parameter 2.1.5.50.

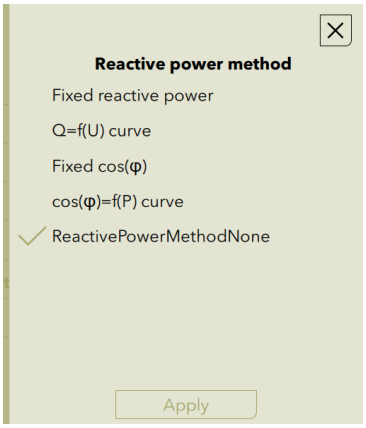

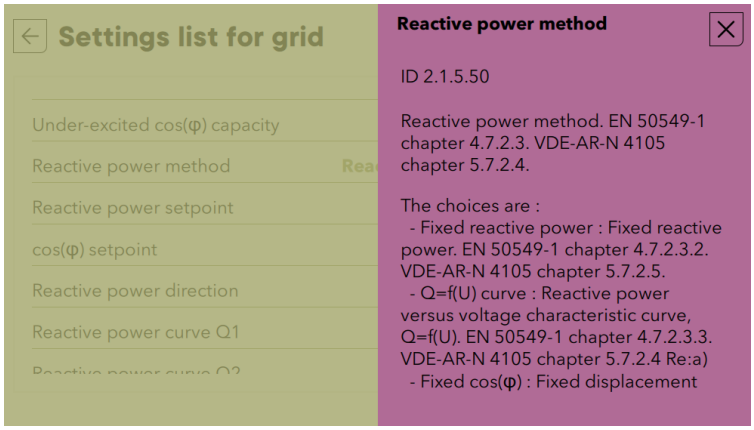

The maximum reactive production range required by the standards is a cos(phi) of +/- 0.9. Beyond this, the inverter is not obliged to supply reactive power and this limit is respected in all operating modes.

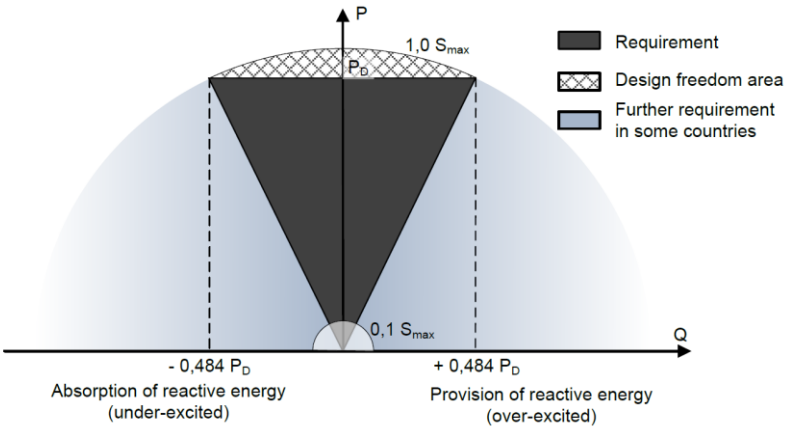

The sign convention used in the settings is identical to the figure above. The reactive load of the inverter (= as an inductive load that reduces the voltage) has a negative sign.

The details for each of the operating modes are:

- For fixed cos(phi) :
  - Set the desired cos(phi), typically 0.96
  - Use underexcited, i.e. as an inductive load so that the effect is a voltage drop on an inductive line.

cos(φ) setpoint	1	ID 2.1.5.52
Reactive power direction	Under-excited	ID 2.1.5.53

- For cos(phi) versus power: it is possible to define the point at which the reactive power is produced. Indeed, when the production is low, the voltage increases are small and do not require countermeasures. The signs of the reactive power produced are explained with the titles :
  - OE=Over-Excited
  - UE=Under-Exited

React. pow. curve cos(φ) OE1	1	ID 2.1.5.66
React. pow. curve cos(φ) OE2	1	ID 2.1.5.67
React. pow. curve cos(φ) UE3	1	ID 2.1.5.68
React. pow. curve cos(φ) UE4	0.9	ID 2.1.5.69
Reactive poewr curve P1	0 %	ID 2.1.5.70
Reactive poewr curve P2	10 %	ID 2.1.5.71
Reactive poewr curve P3	50 %	ID 2.1.5.72
Reactive poewr curve P4	100 %	ID 2.1.5.73

The general curve is given below:

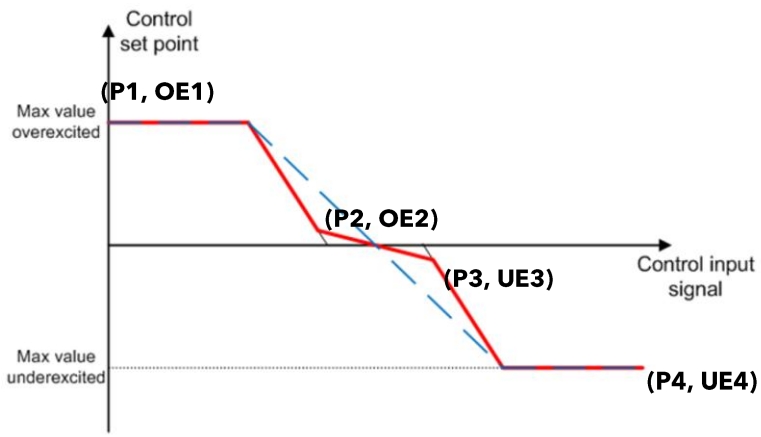

And its typical use is:

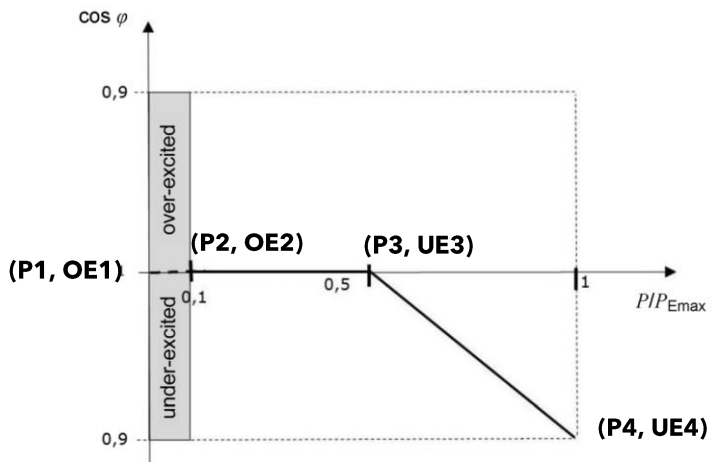

- For cos(phi) versus voltage: in this case, reactive power is produced only if the voltage increases (or decreases) according to certain thresholds. The maximum reactive power (100%) corresponds to a minimum cos(phi) of 0.9.

Reactive power curve Q1	100 %	ID 2.1.5.54
Reactive power curve Q2	0 %	ID 2.1.5.55
Reactive power curve Q3	0 %	ID 2.1.5.56
Reactive power curve Q4	-100 %	ID 2.1.5.57
Reactive power curve U1	93 %	ID 2.1.5.58
Reactive power curve U2	97 %	ID 2.1.5.59
Reactive power curve U3	103 %	ID 2.1.5.60
Reactive power curve U4	107 %	ID 2.1.5.61

The control signal is the voltage and the controlled variable is the reactive power:

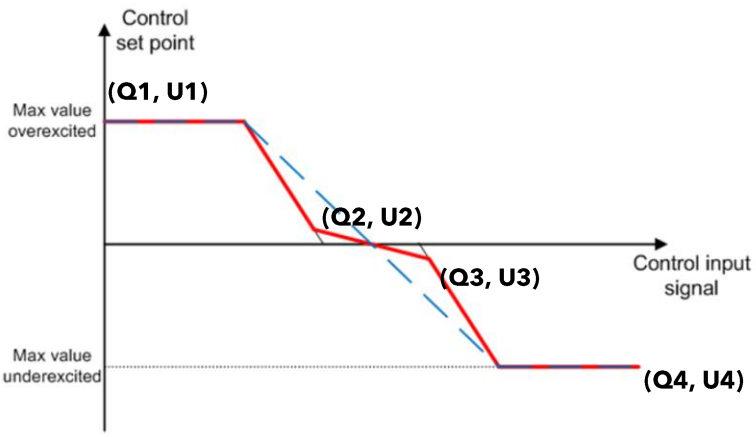

The typical use of this function is given below:

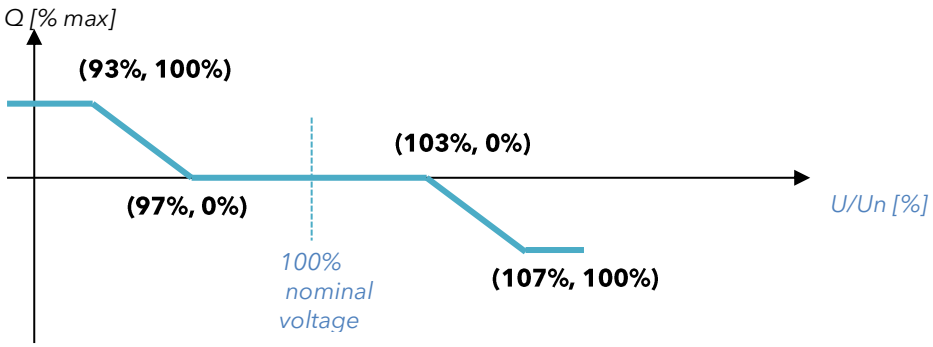

- For fixed reactive production: use setting ID 2.1.5.51 in % of nominal power. It is useful for a system where an external controller dynamically manages the reactive power by sending instructions via Modbus. The reactive power is limited by the cos(phi) min which is 0.9 by default.

Reactive power setpoint

ID 2.1.5.51
Unit [%]

Produced reactive power setpoint, percentage of rated active power. Negative value for a consummed reactive power. EN 50549-1 chapter 4.7.2.3.2. VDE-AR-N 4105 chapter 5.7.2.5

Note: In case of stability problems the reaction speed (PT1 filtering) can be adjusted with ID 2.1.5.62. Details can be found in the VDE and EN standards mentioned as reference.

10.2 AC-LOADS

The AC-Loads is where the user electrical consumptions are connected.
The output voltage is 230V phase to neutral and 400V phase to phase in standard three phased configuration (default). The frequency is fixed at the nominal frequency of 50Hz for the NX3 by default.

The AC-loads are monitored and recorded in the datalog.

AC-coupling of grid inverters on the inverter AC-Loads side is only permitted with restrictions. See the special application chapter for details about it.

10.3 AC-FLEX

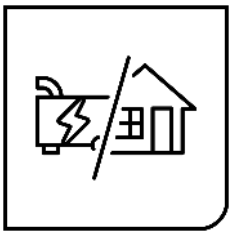

The next3 has an AC connection that can be freely programmed as:

- A second AC-Source, for example for
  - Grid /genset in hybrid installations with grid and a generator backup that don't require grid connections securities.
  - Gensets of different sizes for fuel consumption optimisation
  - Shore connection/onboard generator for boats
- A second AC-Loads, for example for
  - load shedding, non-priority loads, dump loads, etc.
  - load monitoring

The choice of configuration is done at the system set up with the configuration wizard. The AC-Flex behaviour is fixed and cannot be changed during operation for security reasons. To change the configuration, you will need the expert access code and to run the wizard again (restart the settings).

10.4 SOLAR PV

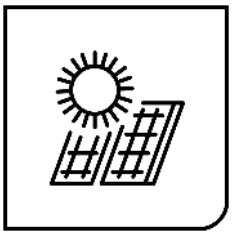

Two strings of solar photovoltaic modules can be connected to the next3 with two independent MPPTs. Indications about the connection and dimensioning of the PV array is given in the "*Wiring*" chapter.

The next3 is a renewable energy friendly converter and always try to optimize the solar part in the system. For a standard user, there is nothing/little to modify for the solar converter: as soon as there is solar energy, the next tries to use it first.
All the settings about this general behaviour are set during the "Wizard settings" process. During operation, all the limits and constraints are automatically managed by the nx3. Power production and storage is optimally dispatched in the system.
The solar grid feeding can be authorized or disabled depending on the AC Source type: grid or genset. There are dedicated screens in the AC-source settings on the wizard where you choose if grid feeding is allowed or not.

The PV production depends on the irradiance on the PV modules of course, but also on other constraints in the system:

- If it is an off-grid system, the solar energy will directly supply the loads and charge the batteries. However, if the battery is full and the loads are small, the solar production will be reduced. That is because the energy can go nowhere, so the excess is lost to avoid overcharging the battery.
- The charging limits are given by the battery settings (see Battery section 10.5). The next3 smart inverter can be connected to lithium batteries with communicating BMS on CAN bus (see compatible list in chapter 5.2.7). In that case the manufacturer BMS decides the voltage levels and currents that are optimal for the battery. There are dedicated screens for the battery settings on the wizard.
- During grid feeding, the max power will be limited according to the AC-source breaker amps configured during the wizard.
- The solar production can be limited according to the grid code that requires grid support function, for example the production reduction in function of the grid frequency.

To optimize the solar power use, for example with dump load connection, you can use the AC-Flex connection or the auxiliary contacts. See the section "AC-Flex" and Aux-contacts" in nextOS manual to adjust their settings for solar maximization.
The proper insulation of the PV+ and PV- is checked at every start-up. An error will be shown on the screen if there is ground fault and the inverter doesn't work for security reasons.

The state of an MPPT input can be:

- **Production**: The converter is producing normally, without limitations
- **Current Limited**: The converter is producing but limited because the maximum current is reached
- **Temperature Limited:** The converter is producing power but is limited because of the temperature (temperature derating is applied)
- **Solar Excess**: The converter cannot convert all the available energy because there is no way to use it (battery full, no load, no grid feeding, etc.)
- **Night**: The converter is not producing because there is not enough sun to work properly (night)

- **Dawn/Dusk**: there is voltage on solar generator but not enough to start the equipment.
- **Disabled**: The converter is disabled. The equipment is manually turned off by the operator with the main on/OFF button, the nx-control, or communication.
- **Starting:** The converter is starting
- **Error**: Some errors are pending, prohibiting the converter to work properly. See the messages list for more information.

The total energy is the recorded since the first start of the next
The saved fuel is computed on the base of a standard genset efficiency in hybrid systems (25% efficiency on diesel, which is even quite optimistic, that mean the savings are probably higher than this estimation).

10.5 BATTERY

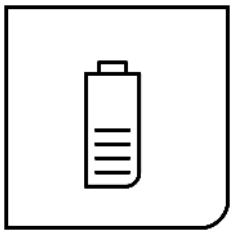

The next3 is a fully automatic charger designed to guarantee an optimum charge for the most used battery types: lead (liquid acid, gel or AGM), and Lithium among others. The next3 charger will use the energy either from solar or from the grid/genset. The choice of the battery type is done during the wizard at commissioning and cannot be changed during operation.
Standard lead batteries with liquid (VLA, VRLA), gelled (GEL) and AGM electrolyte may be used. The next3 can easily be configured to adapt the charging profile (bulk, absorption, equalization, floating) and voltages to the battery type connected. Other battery types as Ni-Cd, NiFe, Vanadium, Aquion, etc. can also be used as the configuration possibilities for voltage levels and currents are very flexible.
The next3 can be connected to lithium Battery Management System (BMS) with CAN bus if the protocols of communication are compatible. In that case the BMS decides the voltage levels and currents that are optimal for the battery and communicates this information to the next3 system.
The solar battery charger enters automatically into operation as soon as the solar irradiation is sufficient and PV modules produce enough voltage (200V start-up voltage). The charging from the grid/genset is performed according to the AC energy management settings. When charging from the grid/genset, the next3 follows the same charging cycle as the solar. The maximum charge current of the battery will limit both the charging with solar and with the grid. The solar has the priority, and the power coming from AC source is decreased first.
The next3 configuration can be modified by the user or the installer to adapt the equipment to the chosen battery in the best possible way. These parameters can be modified by means of the remote control nx-interface.

ℹ	The use of other battery types like NiFe, Ni-Cd, non-communicating Li-ion or others is possible if the charge profile is properly programmed, in accordance with the specifications of the battery manufacturer, in agreement with the battery manufacturer and under the responsibility of the installer.

10.5.1 Energy management of the battery

The energy management of the battery is performed with the "*SOC for backup*" mainly. In the advanced setting the "*SOC for gridfeeding*" is also available.

The default values are 100% for SOC for gridfeeding, 20% for SOC for backup with lithium and 50% soc for backup with lead acid batteries.

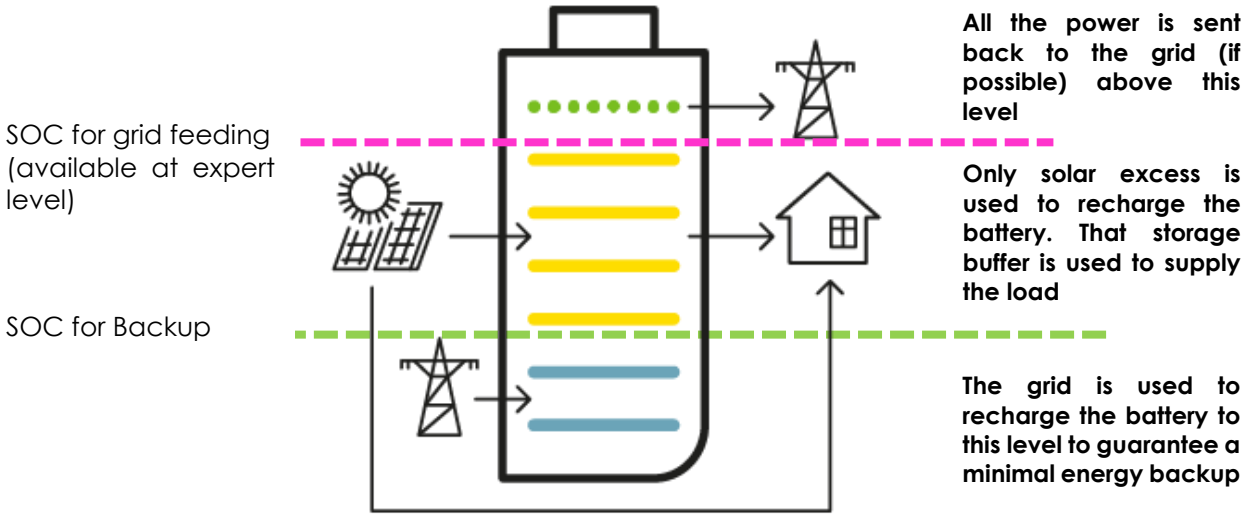

10.5.1.1 Comments about the State Of Charge (SOC) for grid feeding

The principle of the SOC for grid feeding is that when the SOC reaches this level, the power is sent to the grid. If the SOC is higher than this threshold, the battery is discharged in the grid (if grid available and grid feeding allowed). After some time, the SOC will be at the setting value and there will be no grid feeding from the battery anymore.
The SOC for grid feeding can be used for
Buffering peak solar production when grid feeding power is limited.
Discharging the battery voluntarily for tests by a manual change of the parameter.
Keep the battery at a lower SOC than 100% without losing the energy production
If the SOC for grid feeding is 100%, the battery voltage is maintained at the target voltage of the cycle (for example absorption voltage).
When discharging the battery, the low boundary for voltage will be limited to undervoltage level +2% higher. That means the battery will go down to the SOC you adjusted but keeping that minimum voltage to reduce the discharging current.

The SOC for grid feeding must be set higher than the SOC for backup.

If the SOC for grid feeding is set lower than 100%, activate a periodical chargeto 100% to be sure the battery is recalibrated regularly. That can be done to enhance battery life by not charging them fully but operating lower.

10.5.1.2 Battery cycle

The next3 is a fully automatic solar and grid charger designed to guarantee an optimum charge for most type of batteries: lead/liquid acid, lead/gel, AGM batteries or Lithium. The battery charger enters automatically into operation as soon as the irradiation is sufficient, and the photovoltaic panel voltage is sufficient.

The charging from the grid/genset is performed according to the AC energy management settings. When charging from the grid/genset, the next3 follows the same charging cycle as the solar.
The batteries can be fully charged by the successive phases :

1) Bulk phase
2) Absorption phase
3) Floating phase
4) Equalization phase

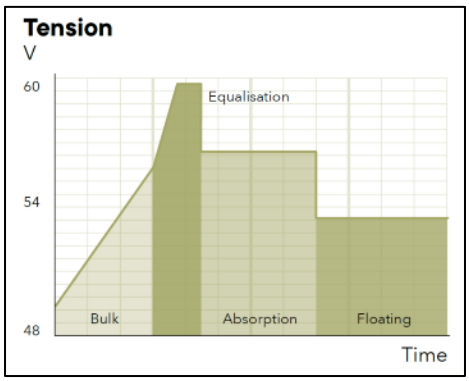

In a general manner, lead batteries charging profile consist of 3 to 4 phases while the lithium only need 2; bulk and floating.
When connected to a communicating lithium battery BMS, the charging profile is given by the BMS and cannot be adjusted in the next settings.

For more information, contact your battery supplier who will inform you on the values to be applied for his products.

10.5.1.3 Temperature compensation

For non-communicating battery (no BMS) with a nx-tempSensor, the voltage adjustment levels for charging the battery (absorption, equalization, floating…) are automatically corrected in real time according to the battery temperature.
The value of this compensation is given in V/°C for a reference temperature of 25°C by a parameter. Default value corresponds to -3mV/°C/cell which is -0.072V/°C for a 48V battery. For example at a temperature of 30°C, the voltage compensation is: (30-25)*(-0.072) = -0.36V. For a floating voltage value set to 54.4V, the effective floating voltage (compensated) will be 54.04V at 30°C.
Another example with 5°C, the compensation will be (5-25)*(-0.072) = +1.44V, so it is a floating voltage that goes from 54.4V to 55.84V.

10.5.1.4 SOC for end of discharge

To prevent a stop/disconnection of the battery by the BMS that would require a manuel reset or that would definitely block the system, a SOC for end of discharged can be chosen. That way, the next3 stops to discharge the battery before the signal of the BMS and before the opening of the BMS contactors that would completely unpowered the whole system. The next day, or when the grid/genset or the sun are back, it is possible to recharge the battery and recover.

An error is set if the SOC is lower than this value. The discharge of the battery is prohibited when the error is set but the charge is still allowed. The error is reset if the SOC is greater than or equal to the SOC for backup or if the bit "SOC for end of discharge" in the property: "Conditions for energy management" is not set.

By default, the function is deactivated for non-communicating batteries and activated with an initial value of 15% for communicating batteries.

10.6 Device and I/O: Aux contacts, Inputs and communication

One next3 inverter is equipped with following interfaces:

- 2 AUX-contacts:
  - The auxiliary contacts are useful for simple automation tasks in energy systems such as load management, automatic start of generator, simple self-consumption optimisation, …
  - The unpowered state of the relay is a contact between C (common) and NC (normally closed). When the auxiliary relay is activated, the contacts switchover and is between C and NO (normally open).

- 2 remote entries:
  - The remote entries IN1 and IN2 are inputs that can be active with a 5 to 60Vdc voltage to the return reference. An +12V supply is available on the connector for the use of dry contacts. Don't use it for other purpose than the activation of input entries.

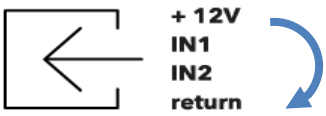

Give a voltage signal between on of the IN and the return.

The +12V can be directly for this

The various possibilities are given with the schematics below

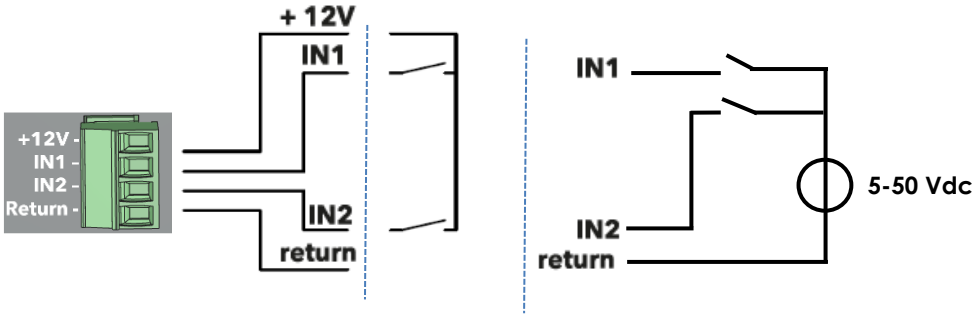

For activation with a dry contact:
Supply voltage with +12V, go to the contact and come back to the wanted input (in1 or in2)

For activation with an external source: a potential of 5Vdc to 60Vdc must be applied between an input and the return.
Entry impedance is 10kOhm

External 12V can be deactivate with settings in the device menu (on nx-interface).

- 1 RS485i for M2M communication. It is not used in first versions of the software and will come with future firmware updates. Control of the next3 system with MODBUS is performed through the nx-interface port and not the physical port situated on the next3 itself.
- 1CANi for lithium BMS communication (setup in the battery menu, see the battery chapter of this manual).

10.6.1 AUX-contacts settings

The auxiliary contacts can be programmed to open and close under various conditions.

For the end-user, the most common use of the contact is to start a generator, or to switch on/off a load (up to 16A ac).
The programming is done mainly with a simplified menu (at level 3) proposing the choice between Modes:

- **Manual OFF**: always deactivated, in position NO. This is also the unpowered state.
- **Manual ON**: always activated, in position NC
- **AUTO**: some activation/deactivations conditions are used. This list of possibilities are exactly the same as for the Flex load and will not be repeated below.

10.6.2 IN-CMD settings

The remote entry is used to give orders to the next system with external contacts. It can be useful to perform simple automation tasks with the next.

	Then command input 1 is used for DRM0 function in the Australian version and cannot be freely programmed.

The CMD menu is situated in the device (click on the next icon in the middle of the synoptic)

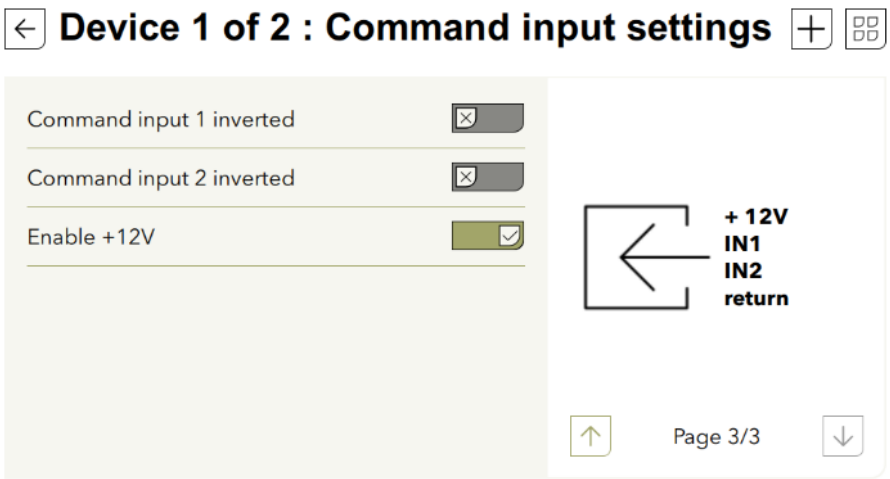

The following functions can be activated through the command entries:

- **Connect AC-FLEX loads**
- **Activate an AUX contact**
- **Stop the inverter**
- **Change the charge/discharge levels of the battery for voltage, current, SOC.**
- **…** More possibilities will be implemented in the future.

10.7 BEHAVIOUR IN PROBLEMATIC CONDITIONS

In operation the next3 protects itself with some programmed behaviour

10.7.1 Thermal behaviour

The next3 is rated at 25° ambient temperature with proper ventilation (space around the next3). It has several internal temperature measurements and performs a derating of its functionalities in case of overheating:

- The solar production is reduced from the maximal current of 20A down to 0A to stabilize the temperature at acceptable level.
- The battery charging and discharging current is reduced to stabilize the temperature.
- The inverter max power is limited:
    - In islanded mode, the power is directly given by the loads. If the max current is reached, the voltage drops because the inverter cannot supply the load. When the voltage goes under a voltage threshold of nominal power -10%, the inverter goes to overload.

A message indicates if the performances are limited by temperature.

10.7.2 Overload

In case of overload the inverter stops.

11 MAINTENANCE OF THE INSTALLATION

The next3 does not require any maintenance.

Check regularly:

- Check that the venting is not obstructed by objects or dirt.
- Check of the connections (tightening, general condition).
- Check if software updates are available. The next3 can be connected to internet and it is important to regularly perform the updates.

For the rest of the energy system, we can advise:

- See battery manufacturer for specific advice on battery maintenance.
- Clean regularly your PV panel to optimize the production, check the general state.

The monitoring/datalogging of the next3 will help you to understand what happens in the system.

12 TECHNICAL DATA

next3

Our versatile 3-phase smart inverter charger with built-in solar MPPT inputs and a wide range of extraordinary features. Ensuring the swiss quality to have outstanding performances for both offgrid and ongrid applications, the next generation brings the battery-based systems to the next level.

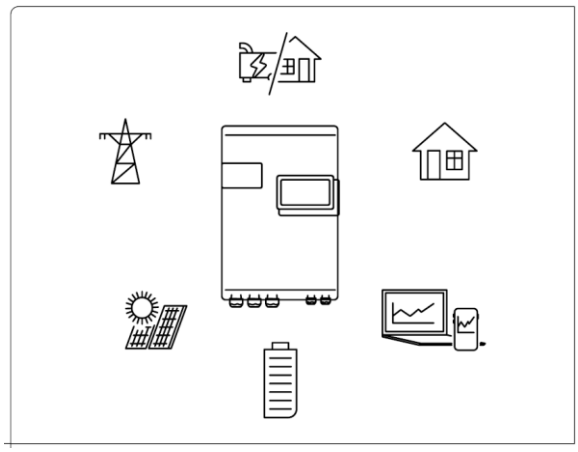

next nx3

STUDER

Inverter + battery charger **Onduleur + chargeur de batterie | Wechselrichter + Batterielader | Inversor + Cargador de batería**

Continuous power 25°C Puissance continue 25°C | Dauerleistung 25°C | Potencia continua 25°C	15000 VA
Power 30 min. 25°C Puissance 30 min. 25°C | Leistung 30 Min. 25°C | Potencia 30 min. 25°C	16000 VA
Power 5 sec. 25°C with solar / Inverter / 1-phase Puissance 5 sec. 25°C avec solaire / onduleur / 1-phase | Leistung 5 Sek. 25°C mit PV / weschelrichter / 1-Phase | Potencia 5 seg. @25°C con solar / inversor / 1 fase	30000 / 24000 / 10000 VA
Nominal output voltage, line to neutral* Tension sortie nominale, phase-neutre | Nennausgangsspannung - Phase zum Neutralleiter | Tensión nominal de salida, fase-neutro	pure sine wave 220/230/240 Vac (±1%)
Nominal output voltage, line to line* Tension sortie nominale, phase-phase | Nennausgangsspannung - Phase zum Phaseleiter | Tensión nominal de salida, fase-fase	pure sine wave 380/400/415 Vac (±1%)
Nominal output frequency* Fréquence sortie nominale| Nennausgangsfrequenz | Frecuencia nominal de salida	50/60 Hz (±0.02%)
Nominal battery voltage (input range) Tension nominale de la batterie (plage de tension) | Nominalspannung der Batterie (Spannungsbereich) | Tensión nominal de batería (rango de tensión)	48 Vdc (36 - 68 Vdc)
Maximum charging current / power* Courant / puissance de charge maximum | Maximaler Ladestrom / Leistung | Corriente / potencia de carga máxima	300 Adc / 15000 W

Cos φ 0.1-1 | **Harmonic distortion** < 1 % | **Charge characteristic*** 6 steps: bulk, absorption, floating, equalization, reduced floating, periodic absorption | **Temperature compensation*** with nx tempsensor (included)

Cos φ 0.1-1 | **Distorsion harmonique** < 1 % | **Caractéristique de charge*** 6 étapes : bulk, absorption, maintien, egalisation, maintien réduit, absorption périodique | **Compensation de la température*** avec nx tempsensor (inclus)

Cos φ 0.1-1 | **Klirrfaktor** < 1 % | **Ladecharakteristik*** 6 Stufen: Bulk, Absorption, Schwebeladung, Equalisierung, reduzierte Schwebeladung, periodische Absorption | **Temperatur Kompensation*** mit nx tempsensor (inbegriffen)

Cos φ 0.1-1 | **Distorsión armónica** < 1 % | **Características de carga*** bulk, absorción, flotación, ecualización, flotación reducidad, absorción periódica | **Compensación por temperatura*** con nx tempsensor (incluido)

Solar PV Solaire PV | Solar PV | Solar FV

Number of MPPT inputs Nombre des entrées MPPT | Anzahl der EingängeMPPT | Número de entradas MPPT	2
Max PV short circuit current per PV input Courant max de court circuit par entrée PV | Max PV-Strom pro PV-Eingang | Corriente max de cortocircuito por entrada FV	27 Adc
Maximum PV open voltage (Voc) Tension de circuit ouvert maximum | Max Spannung des PV-Generators | Tensión máxima de circuito abierto	900 Vdc
Start up voltage / Shut off voltage Tension de démarrage / Tension de coupure | Anlaufspannung / Abschaltspannung | Tensión de arranque / Tensión de apagado	200 / 100 Vdc
Maximum solar power produced (electronic limitation) Puissance solaire max. produite | Max. produzierte PV-Leistung | Potencia solar max. producida	2 x 8000 W
Maximum solar power recommended (@STC) Puissance solaire max. recommandée (@STC) | Max. Leistung des PV-Generators (@STC) | Potencial solar máxima recomendada (@CEM)	2 x 12000 W
MPP voltage range recommended Plage de tension MPP | MPP-Spannungsbereich | Rango de tensión MPP	300 - 700 Vdc

Maximum efficiency solar to grid / EU / CEC 97 / 92 / 93% | **MPP efficiency static / dynamic** > 99 / 99% | **Maximum efficiency solar to battery** 95 %

Rendement de conversion max. solaire au réseau / EU / CEC 97 / 92 / 93% | **Efficacité MPP statique / dynamique** > 99 / 99% | **Rendement de conversion max. solaire à batterie** 95 %

Max. Effizienz von Solar zu Netz / EU / CEC 97 / 92 / 93% | **MPP-Wirkungsgrad statisch / dynamisch** > 99 / 99% | **Max. Effizienz von Solar zu Batterie** 95 %

Rendimiento de conversión max. solar a red / EU / CEC 97 / 92 / 93% | **Eficiencia MPP estática / dinámica** > 99 / 99% | **Rendimiento de conversión max. solar a batería** 95 %

Transfer Transfert | Transfer | Transferencia

AC source (grid or genset) Source AC (réseau ou génératrice) | AC-Quelle (Netz oder Generator) | Entrada AC (red o generador)	
Maximum rated current Courant nominal maximal | Maximaler Nennstrom | Corriente nominal máxima	3 x 80 Aac
Operating voltage range, line to neutral Plage de tension, phase-neutre | Betriebsspannungsbereich, Phase zum Neutralleiter | Rango de tensión de funcionamiento, fase-neutro	176 – 288 Vac
Nominal voltage, line to neutral / line to line* Tension nominale, phase-neutre / phase-phase | Nennspannung - Phase zum Neutralleiter / Phase zum Phaseleiter | Tensión nominal, fase-neutro / fase-fase	220 – 230 – 240 / 380 – 400 – 415 Vac
Nominal frequency* Fréquence nominale| Nennfrequenz | Frecuencia nominal	50 / 60 Hz
Overvoltage category (OVC) Catégorie de surtension | Überspannungskategorie | Categoría de sobretensión	III
Grid code compliance* Catégorie de surtension | Überspannungskategorie | Categoría de sobretensión	EU Commission Regulation 2016/631 (NC RfG), EN 50549-1:2019, VDE-AR-N 4105:2018, IEC 62116, IEC 61727

AC flex (2nd source or load) AC flex (2ème entrée ou sortie) | AC flex (2. steueubare AC-eingang oder ausgang) | AC flex (2da entrada o salida)	
Maximum rated current Courant nominal maximal | Maximaler Nennstrom | Corriente nominal máxima	3 x 80 Aac
Operating voltage range, line to neutral Plage de tension, phase-neutre | Betriebsspannungsbereich, Phase zum Neutralleiter | Rango de tensión de funcionamiento, fase-neutro	176 – 288 Vac
Nominal voltage, line to neutral / line to line* Tension nominale, phase-neutre / phase-phase | Nennspannung - Phase zum Neutralleiter / Phase zum Phaseleiter | Tensión nominal, fase-neutro / fase-fase	220 – 230 – 240 / 380 – 400 – 415 Vac
Nominal frequency* Fréquence nominale| Nennfrequenz | Frecuencia nominal	50 / 60 Hz
AC loads Sortie AC | AC-Ausgang | Salida AC	
Maximum output current Courant maximal sortie | Maximaler Ausgangstrom | Corriente máxima de salida	3 x 102 Aac

General data Données générales | Allgemeine Daten | Datos generales

Product dimensions h/w/l and weight Dimensions h/l/L et poids du produit | Produktabmessungen H/B/L und Gewicht | Dimensiones A/a/l y peso del producto	wall-mounted : 320 / 450 / 760 mm 58 kg rack 19" : 350(8u) / 485 / 675 mm 58 kg
Transport dimensions h/w/l and weight Dimension h/l/H et poids du transport | Transportabmessungen H/B/L und Gewicht | Dimensiones A/a/l y peso del transporte	600 / 800 / 720 mm 72 kg
Selfconsumption OFF / Standby / ON Autoconsommation OFF / Standby / ON | Eigenverbrauch OFF / Standby / ON | autoconsumo OFF / Standby / ON	6 / 7 / 41 W (+5 W with nx interface)
I/O Communications I/O Communications | I/O Kommunikation | I/O Comunicación	2 x nx communication bus RJ45/8, 1 x CAN BMS, 1 x RS485i (Modbus), 1 x nx tempSensor
Multifunction I/O contacts Contacts multifonctions I/O | Multi-funktionskontakte I/O | Contactos multifuncionales I/O	2 x Input, 2 x Output, rating 16 A each
Interfaces Interfaces | Interfaces | Interfaces	nx interface, datalogger USB 1-min resolution, 1 x RS485i, 1 x CANi, 1 x LAN, 4 x USB, nx wifidongle, studer portal + easy monitoring APP
Safety+EMC conformity (CE marking) Confirmité sécurité+CEM (CE) | Sicherheits+Elektromagnetische Konformität (CE) | Conformidad seguridad+CEM (CE)	EU Low Voltage Directive (LVD) 2014/35/EU, EU Electromagnetic Compliance (EMC) 2014/30/EU

Ingress Protection according to IEC60529 IP20 | **Operating ambient temperature range** -20 to 55°C | **Relative humidity operation range** 5 to 95 % (non condensing) | **Mounting location** Indoor, unconditioned

Indice de protection selon IEC60529 IP20 | **Plage de température de travail** -20 to 55°C | **Humidité relative de fonctionnement** 5 - 95 % (sans condensation) | **Emplacement de montage** intérieur, non conditionné

Schutzart nach IEC60529 IP20 | **Betriebstemperatur** -20 to 55°C | **Relative Lüftfeuchigkeit bei Betrieb** 5 - 95 % (nicht Kondensierend) | **Montageort** Indoor, unkonditioniert

Índice de protección según IEC60529 IP20 | **Rango de temperatura de trabajo** -20 to 55°C | **Humedad relativa de funcionamiento** 5 - 95 % (sin condensación) | **Lugar de montaje** interior, sin acondicionar

12.1 DERATINGS WITH TEMPERATURE

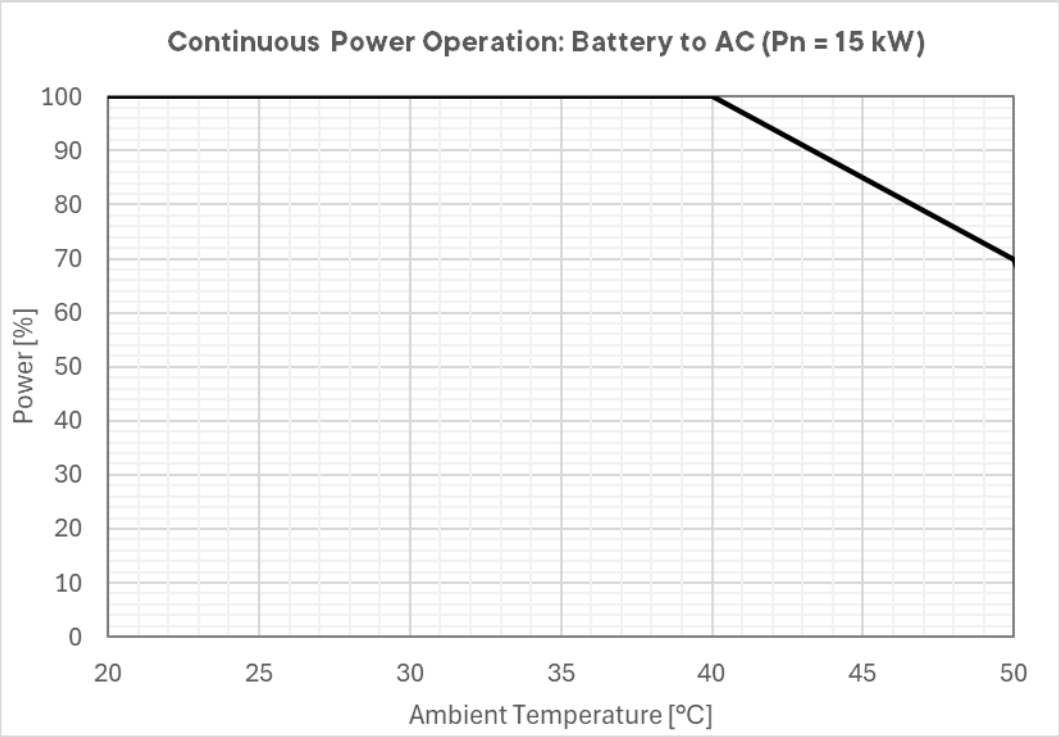

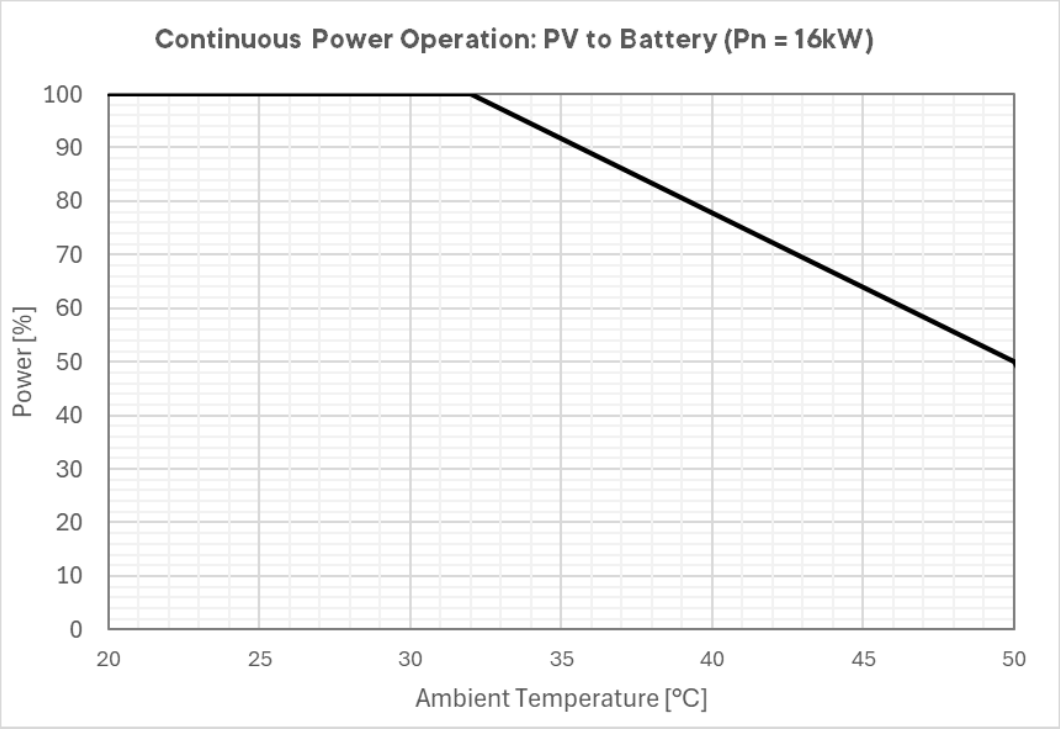

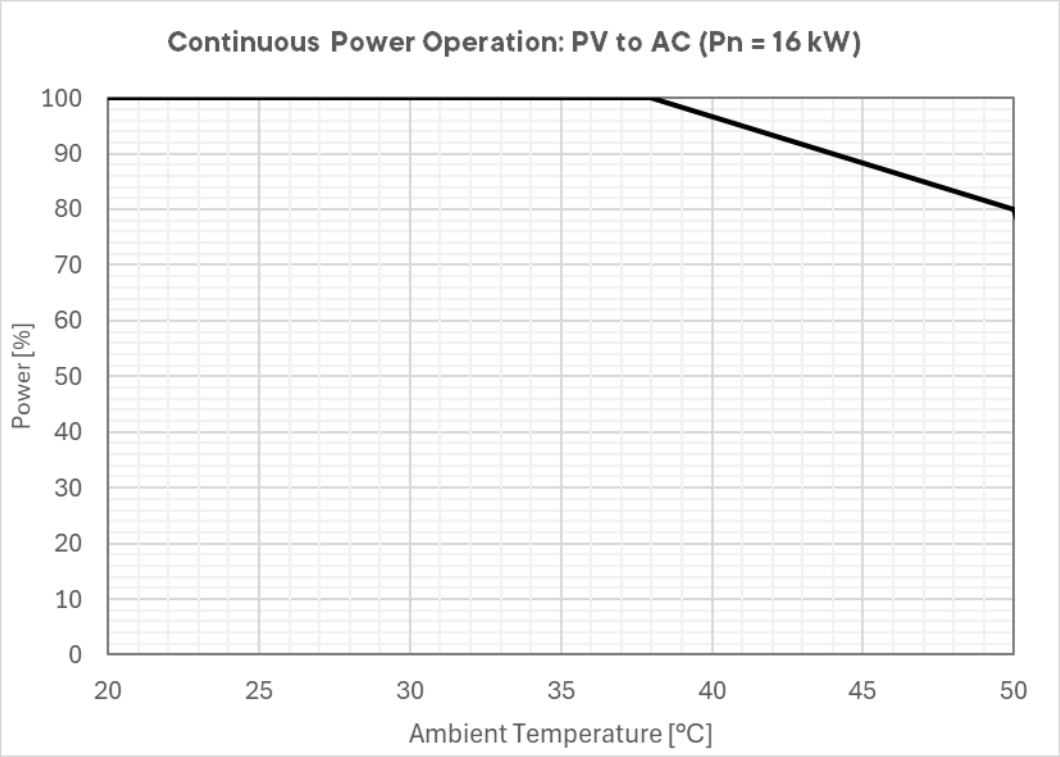
Continuous Power Operation: PV to AC (Pn = 16 kW)
Power [%]
100
90
80
70
60
50
40
30
20
10
0
20
25
30
35
40
45
50
Ambient Temperature [°C]

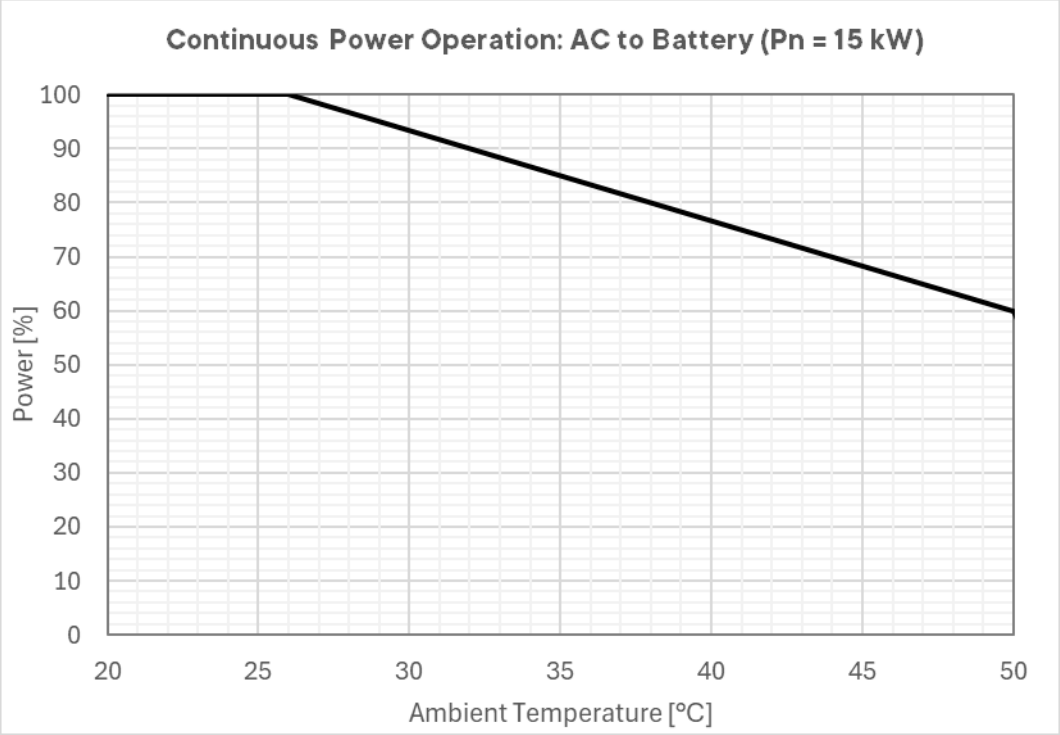
Continuous Power Operation: AC to Battery (Pn = 15 kW)
Power [%]
100
90
80
70
60
50
40
30
20
10
0
20
25
30
35
40
45
50
Ambient Temperature [°C]

12.2 AUTRALIAN LABELLING

The Australian version has a specific labelling to comply with the requirement of the Australian regulation:

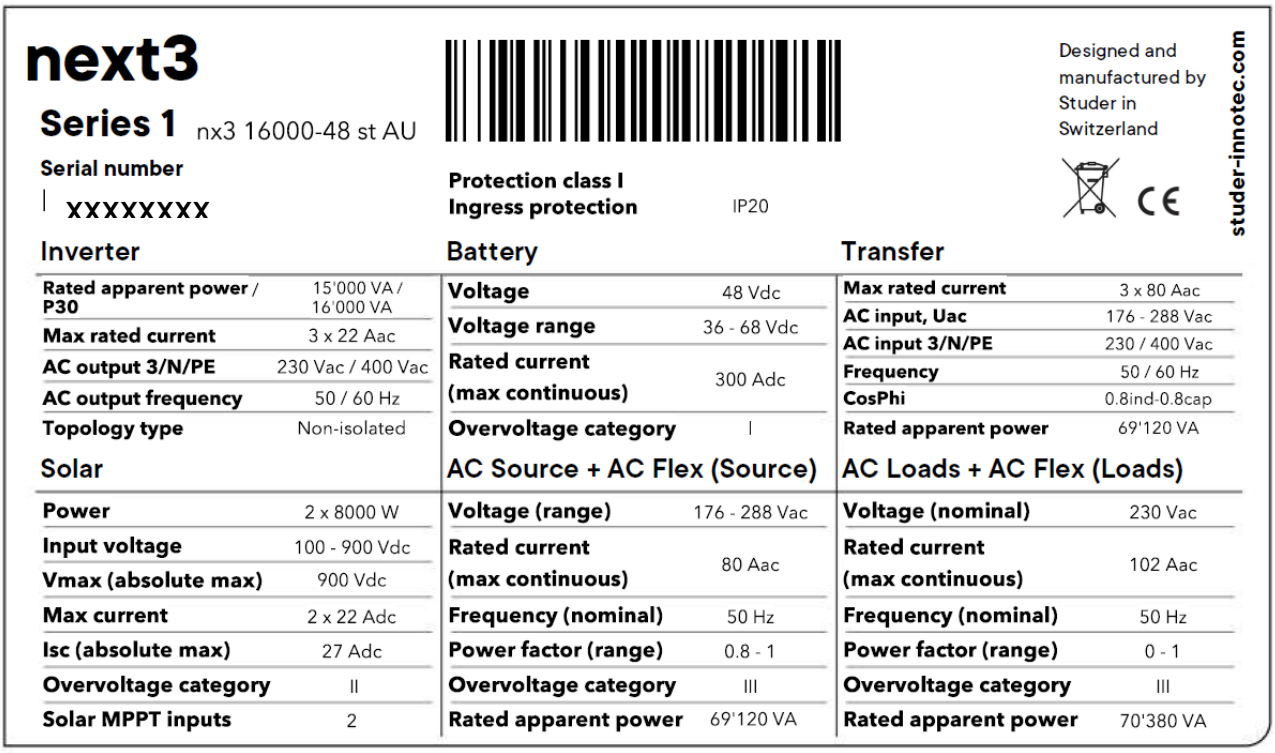

next3

Series 1 nx3 16000-48 st AU

Serial number
XXXXXXXX

Protection class I
Ingress protection IP20

Designed and manufactured by Studer in Switzerland

studer-innotec.com

Inverter		Battery		Transfer	
Rated apparent power / P30	15'000 VA / 16'000 VA	**Voltage**	48 Vdc	**Max rated current**	3 x 80 Aac
Max rated current	3 x 22 Aac	**Voltage range**	36 - 68 Vdc	**AC input, Uac**	176 - 288 Vac
AC output 3/N/PE	230 Vac / 400 Vac	**Rated current (max continuous)**	300 Adc	**AC input 3/N/PE**	230 / 400 Vac
AC output frequency	50 / 60 Hz			**Frequency**	50 / 60 Hz
Topology type	Non-isolated	**Overvoltage category**	I	**CosPhi**	0.8ind-0.8cap
				Rated apparent power	69'120 VA
Solar		**AC Source + AC Flex (Source)**		**AC Loads + AC Flex (Loads)**	
Power	2 x 8000 W	**Voltage (range)**	176 - 288 Vac	**Voltage (nominal)**	230 Vac
Input voltage	100 - 900 Vdc	**Rated current (max continuous)**	80 Aac	**Rated current (max continuous)**	102 Aac
Vmax (absolute max)	900 Vdc				
Max current	2 x 22 Adc	**Frequency (nominal)**	50 Hz	**Frequency (nominal)**	50 Hz
Isc (absolute max)	27 Adc	**Power factor (range)**	0.8 - 1	**Power factor (range)**	0 - 1
Overvoltage category	II	**Overvoltage category**	III	**Overvoltage category**	III
Solar MPPT inputs	2	**Rated apparent power**	69'120 VA	**Rated apparent power**	70'380 VA

12.3 SECURITY CATEGORIES

Overvoltage category AC connexion: OVC III
Overvoltage category PV connexion: OVC II
Overvoltage category Battery connexion: OVC I
Class equipment: class I

13 PRODUCT RECYCLING

The next3 meets the European directive 2011/65/EU on hazardous substances and does not contain the following elements: lead, cadmium, mercury, hexavalent chrome, PBB or PBDE.

To dispose of this product, please use the service for the collection of electrical waste and observe all obligations in force in the place of purchase.

14 CONFORMITY

The inverter charger next3 described in this manual has been designed and manufactured in accordance with the following European directives:
Low Voltage Directive (LVD) 2014/35/EU
Electromagnetic Compliance (EMC) Directive 2014/30/EU
Restriction of use of certain Hazardous Substances (RoHS) Directive 2011/65/EU

Official up to date EU declaration of conformity (DoC) can be found on our website www.studer-innotec.com as well as some certifications performed by external accredited certification bodies.

14.1 GRID CODE CONFORMITY

The next3 is compliant for grid codes (from version 1.3.0.0):

- VDE-AR-N 4105:2018-11 (tested according to DIN VDE V 0124-10:2020-06)
- EN 50549-1:2019
- IEC 62116:2014
- AS/NZS 4777.2 2020
- TOR Erzeuger Typ A Version 1.1 (tested according to OVE-Richtlinie R25 Ausgabe 2020-03-01)
- C10/11 edition 2.2 and homologated according C10/26
- UNE 206007-1:2013 IN - RD 1699/2011 and RD 413/2014 - UNE 217002 Octubre 2020
- DIN VDE 0126-1-1 VFR2019
- PŘÍLOHA 4 PPDS 2018 (with EN 50549-1:2019)
- EIFS 2018:2 (with EN 50549-1:2019)

The grid code is selected during the commissioning with the wizard. To be compliant the installer must not change later any individual settings concerning grid code. The modification of grid code or individual settings concerning that subject is protected by a user code.

Scans of grid code certification test result are available on the product page and the certification can be found on the product documentation webpage: https://technext3.studer-innotec.com
Each country requirement is described on the page about compatibility: https://technext3.studer-innotec.com/compatibility#2.-Grid-code-compatibility

© copyright Studer-Innotec SA

STUDER Innotec SA
Rue des Casernes 57
1950 Sion – Switzerland
Tél : +41(0) 27 205 60 80
Fax : +41(0) 27 205 60 88
info@studer-innotec.com
www.studer-innotec.com

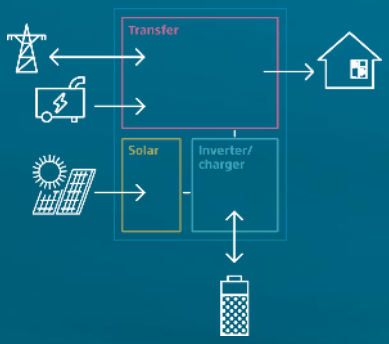

STUDER Innotec SA
Rue des Casernes 57
1950 Sion – Switzerland
Tél : +41(0) 27 205 60 80
Fax : +41(0) 27 205 60 88
info@studer-innotec.com
www.studer-innotec.com